ELECTRICAL LEGENDS

ONE-LINE DIAGRAM LEGEND

1500KVA
2.4KV Δ - 480Y/277V
3%Z, 60HZ
TRANSFORMER WITH PRIMARY AND SECONDARY VOLTAGE, AND KVA RATING AS NOTED

CS 4#14,3/4"
20 3P-60 22:3#8,#10G, 4#14,2"
CIRCUIT NO.22 WITH #8 INSULATED CONDUCTORS AND 1#10 GROUND WIRE FOR A 20HP MOTOR WITH 3 POLE, 60A, MOTOR DISCONNECT SWITCH AND 4#14 INSULATED CONDUCTORS FOR AUXILIARY ITEM, AS FOR EXAMPLE A CONTROL STATION, ALL IN 2" CONDUIT.

AUXILIARY ITEMS MAY NOT BE COMPLETELY SHOWN
HS
20 3P-60 22:3#8,#10G 4#14,2"
CONDUCTORS FOR AUXILIARY ITEM SHALL NOT PASS THROUGH MOTOR DISCONNECT SWITCH.

AUXILIARY ITEMS MAY NOT BE COMPLETELY SHOWN
15
ONE-LINE SHOWING POWER AND CONTROL TO A PACKAGE UNIT, AS FOR EXAMPLE A STEAM GENERATOR OR AN AIR HANDLING UNIT, SHALL IMPLY THAT ANY AND ALL ASSOCIATED EQUIPMENT SHALL ALSO BE INSTALLED AND WIRED AS REQUIRED BY THE EQUIPMENT FURNISHED.

INDICATES THAT ALL OR PART OF CIRCUIT MAY BE ROUTED IN DUCT BANK OR UNDERGROUND. CONDUIT SIZE SHOWN ON ONE-LINE IS ABOVE GROUND AND/OR INSIDE OF STRUCTURE. SEE DUCT BANK SCHEDULE AND SECTIONS FOR CONDUIT SIZE OF UNDERGROUND PORTION OF CIRCUIT.

HIGH VOLTAGE DRAWOUT AIR OR VACUUM CIRCUIT BREAKER

3P-20
LOW VOLTAGE AIR CIRCUIT BREAKER, 3 POLE, 20 AMPERE

S4
SIZE 4 COMBINATION MAGNETIC MOTOR STARTER

LOW VOLTAGE DRAWOUT AIR CIRCUIT BREAKER

HIGH VOLTAGE DRAWOUT CONTACTOR

FUSE AND DISCONNECT SWITCH

S2
SIZE 2 COMBINATION MAGNETIC MOTOR STARTER, REVERSING OR 2 SPEED

S1
SIZE 1 COMBINATION REDUCED VOLTAGE AUTOTRANSFORMER

POTENTIAL TRANSFORMER

CURRENT TRANSFORMER

CURRENT OR POTENTIAL TEST SWITCH

G GENERATOR

K KIRK KEY INTERLOCK

E ELECTRICAL INTERLOCK

R RESISTOR

59G PROTECTION RELAY WITH IEEE DEVICE FUNCTION AS SHOWN

V SINGLE-FUNCTION METER

SURGE OR LIGHTNING ARRESTER

SURGE ARRESTER WITH SURGE CAPACITOR

GROUND CONNECTION

SCHEMATIC SYMBOLS

WIRE CONNECTION POINT
EXTERNAL CONNECTION POINT
NORMALLY OPEN CONTACT
NORMALLY CLOSED CONTACT
STARTER, CONTACTOR OR RELAY COIL
NORMALLY OPEN PUSH BUTTON
NORMALLY CLOSED PUSH BUTTON
MAINTAINED PUSH BUTTON
NORMALLY CLOSED GEARED LIMIT SWITCH
NORMALLY OPEN GEARED LIMIT SWITCH
INDICATING LIGHT
FUSE
POTENTIOMETER
CAPACITOR
DIODE
RESISTOR
CONTROL POWER TRANSFORMER
SWITCH
MS MANUAL STARTER
OL OVERLOAD
OVERLOAD
ELECTRODE
FLOAT SWITCH (CLOSING ON RISING LEVEL)
FLOAT SWITCH (OPENING ON RISING LEVEL)
P PRESSURE SWITCH (CLOSING ON RISING PRESSURE)
P PRESSURE SWITCH (OPENING ON RISING PRESSURE)
V VACUUM SWITCH (CLOSING ON INCREASING VACUUM)
V VACUUM SWITCH (OPENING ON INCREASING VACUUM)
TEMPERATURE SWITCH (CLOSING ON RISING TEMPERATURE)
TEMPERATURE SWITCH (OPENING ON RISING TEMPERATURE)
FLOW ACTUATED SWITCH (CLOSING ON INCREASE IN FLOW)
FLOW ACTUATED SWITCH (OPENING ON INCREASE IN FLOW)
ON TIME DELAY CONTACT (NORMALLY OPEN, WHEN THE COIL IS ENERGIZED THE CONTACT WILL CLOSE AFTER A TIME DELAY)
ON TIME DELAY CONTACT (NORMALLY CLOSED, WHEN THE COIL IS ENERGIZED THE CONTACT WILL OPEN AFTER A TIME DELAY)
OFF TIME DELAY CONTACT (NORMALLY OPEN, WHEN THE COIL IS DE-ENERGIZED THE CONTACT WILL OPEN AFTER A TIME DELAY)
OFF TIME DELAY CONTACT (NORMALLY CLOSED, WHEN THE COIL IS DE-ENERGIZED THE CONTACT WILL CLOSE AFTER A TIME DELAY)
TORQUE SWITCH (NORMALLY OPEN)
TORQUE SWITCH (NORMALLY CLOSED)
LIMIT SWITCH (NORMALLY OPEN)
LIMIT SWITCH (NORMALLY OPEN, HELD CLOSED)
LIMIT SWITCH (NORMALLY CLOSED)
LIMIT SWITCH (NORMALLY CLOSED, HELD OPEN)
DIFFERENTIAL PRESSURE SWITCH (NORMALLY OPEN, CLOSING ON INCREASING DIFF.)
DIFFERENTIAL PRESSURE SWITCH (NORMALLY CLOSED, OPENING ON INCREASING DIFF.)

SWITCH & OUTLET SYMBOLS

S SINGLE POLE SWITCH
S_2 TWO POLE SWITCH
S_{3A} THREE-WAY SWITCH CONTROLLING LIGHTS WITH "A" DESIGNATION
S_4 FOUR-WAY SWITCH
S^{C1}_{M} MOMENTARY SWITCH CONTROLLING CONTACTOR C1
DUPLEX RECEPTACLE 120 VOLT
SIMPLEX RECEPTACLE
RANGE RECEPTACLE
TWISTLOCK RECEPTACLE
30 240V, 1Ø RECEPTACLE, TYPICAL AMPERE RATING NOTED
60 480V, 3Ø WELDING RECEPTACLE, TYPICAL AMPERE RATING NOTED
120 VOLT DUPLEX RECEPTACLE (UPS)
DUPLEX FLOOR OUTLET
TELEPHONE OUTLET
TELEPHONE FLOOR OUTLET
CX COAXIAL CABLE OUTLET
DATA NETWORK OUTLET

MISCELLANEOUS SYMBOLS

STROBE
HORN & STROBE
HORN
T THERMOSTAT
J JUNCTION BOX
GROUND ROD
GROUND ROD WITH TEST WELL
GROUND CONNECTION
DISCONNECT SWITCH
COMBINATION STARTER
POWER PANEL
LIGHTING PANEL
MISCELLANEOUS PANEL
LIGHTING CONTACTOR
CAMERA

BREAKER DETAILS

DETAIL A

52 — 5KV, 1200A, 49KA
A 5KV CLASS MEDIUM-VOLTAGE, DRAWOUT, VACUUM OR AIR INSULATED CIRCUIT BREAKER WITH A 1,200 AMPERE FRAME. BREAKER HAS A 49,000 AMPERE MAXIMUM FAULT CURRENT INTERRUPTING RATING.

DETAIL B

3P-50
A LOW VOLTAGE FIXED MOUNTED MOLDED CASE CIRCUIT BREAKER WITH A 50 AMPERE TRIP RATING. TRIP UNIT IS NON-ADJUSTABLE THERMAL-MAGNETIC TYPE.

1000AT, 1200AF, SST, LSIG, AFRD
A LOW VOLTAGE FIXED MOUNTED MOLDED CASE CIRCUIT BREAKER WITH A 1200 AMPERE FRAME AND A 1000 AMPERE TRIP RATING. TRIP UNIT IS ADJUSTABLE SOLID-STATE TYPE WITH LONG-TIME, SHORT-TIME, INSTANTANEOUS, GROUND FAULT AND ARC-FLASH REDUCTION PROTECTION FEATURES.

DETAIL C

800AT, 1000AS, 1600AF, AFRD
A LOW VOLTAGE, DRAWOUT, POWER OR INSULATED CASE CIRCUIT BREAKER WITH A 1600A FRAME AND SOLID-STATE TRIP UNIT. TRIP UNIT HAS A SENSOR MODULE RATED FOR 1000 AMPERES AND WITH A TRIP RATING OF 800 AMPERES AND ARC-FLASH REDUCTION PROTECTION FEATURES.

CONDUIT & WIRING INSTALLATION LEGEND

CONDUIT EXPOSED
CONDUIT CONCEALED
CONDUIT TURNING UP. CONDUIT TURNING DOWN.
CONDUIT PLUGGED FLUSH. CONDUIT CAPPED.
L2-5 TYPICAL FOR HOME RUN TO BE ROUTED TO LIGHTING PANEL L2 & CONNECTED TO CIRCUIT #5 (MINIMUM NO. 12 AWG CONDUCTORS AND 3/4" CONDUIT)
A LIGHTING FIXTURE. REFER TO NUMBER OR LETTER IN FIXTURE SCHEDULE
11 LINEAR FIXTURE. REFER TO NUMBER OR LETTER IN FIXTURE SCHEDULE.
LP1-3 RECEPTACLE POWERED FROM LIGHTING PANEL LP1, CIRCUIT 3
A LP2-2 LIGHTING FIXTURE POWERED FROM LIGHTING PANEL LP2, CIRCUIT 2 (NON-SWITCHED)
LPA-4 A 11 LIGHTING FIXTURE POWERED FROM LIGHTING PANEL LPA, CIRCUIT 4, VIA SWITCH A
E UNDERGROUND CONCRETE ENCASED ELECTRICAL DUCT BANK
UNDERGROUND CONCRETE ENCASED ELECTRICAL BANK ROUTED BENEATH SLAB-ON-GRADE
EE DIRECT BURIED CONDUIT
GROUND CONDUCTOR
UE UE UNDERGROUND ELECTRIC
OH OH OVERHEAD CIRCUIT

COMMUNICATION SYMBOLS

HORN SPEAKER
DUAL HORN SPEAKER
WALL MOUNTED CONE SPEAKER
SK CEILING MOUNTED CONE SPEAKER

PROTECTION/RELAY DEVICE NUMBERS

25 - SYNCHRONIZING OR SYNCHRONISM-CHECK DEVICE
27 - UNDERVOLTAGE RELAY
32 - DIRECTIONAL POWER RELAY
37 - UNDERCURRENT OR UNDERPOWER RELAY
46 - REV. PHASE OR PHASE-BAL. CURRENT RELAY
47 - PHASE SEQ. OR PHASE BAL. VOLTAGE RELAY
49 - MACHINE OR TRANSFORMER THERMAL RELAY
50 - INSTANTANEOUS OVERCURRENT
51 - AC TIME OVERCURRENT RELAY
52 - AC CIRCUIT BREAKER
59 - OVERVOLTAGE RELAY
63 - PRESSURE SWITCH
64 - GROUND DETECTOR RELAY
67 - AC DIRECTIONAL OVERCURRENT RELAY
71 - LIQUID OR GAS LEVEL RELAY
81 - FREQUENCY RELAY
83 - AUTOMATIC SELECTIVE CONTROL OR TRANSFER RELAY
86 - LOCKOUT RELAY
87 - DIFFERENTIAL PROTECTIVE RELAY

ISSUED FOR CONSTRUCTION

DATE	REVISIONS AND RECORD OF USE NO.	BY	CHK	APP

RICHARD D. TAYLOR ★ LICENSE No 33376 ★ STATE OF FLORIDA PROFESSIONAL ENGINEER

Date:
Engineer of Record: RICHARD D. TAYLOR
Florida License No.: No. 33376

BLACK & VEATCH
Black & Veatch Corporation
2855 N. University Drive, Suite 210
Coral Springs, FL 33065 Certificate No. 8132

CITY OF KEY WEST
DENNIS STREET STORMWATER PUMP STATION IMPROVEMENTS

ELECTRICAL LEGENDS

DESIGNED: RNL
DETAILED: AJP
CHECKED: MAR
APPROVED: RTD
DATE: FEBRUARY 2019

0 1/2 1
IF THIS BAR DOES NOT MEASURE 1" THEN DRAWING IS NOT TO FULL SCALE

PROJECT NO. 193108

E-001
SHEET 27 OF 39

E-001.dwg
PRU81927, 1/25/2019 2:24:57 PM
PRU81927, 2/28/2019 3:54:27 PM

FD193108
D9800

ELECTRICAL ABBREVIATIONS & NOTES

ELECTRICAL GENERAL NOTES

1. SOLID LINES (————————) INDICATE NEW WORK OR EQUIPMENT.
2. SCREENED LINES (————————) INDICATE EXISTING WORK OR EQUIPMENT.
3. DASHED LINES (- - - - - - - -) INDICATE FUTURE WORK OR EQUIPMENT.
4. REFER TO INDIVIDUAL DISCIPLINE CONTRACT DRAWINGS FOR ADDITIONAL ABBREVIATIONS, DETAILS, AND GENERAL DESIGN NOTES.
5. LEGEND SHEETS ARE GENERAL. SOME SYMBOLS AND ABBREVIATIONS MAY NOT BE UTILIZED ON THIS SPECIFIC PROJECT.
6. INFORMATION RELATED TO CIRCUIT IDENTIFICATION, WIRE & CONDUIT SIZES, AND ROUTING, IS ON THE FOLLOWING DRAWING TYPES.
   - A. ONE-LINE DIAGRAMS SHOW CIRCUIT IDENTIFICATION, WIRE QUANTITY AND SIZES, AND CONDUIT SIZE WITHIN STRUCTURES. ONE-LINE DIAGRAMS ALSO INDICATE ORIGIN AND DESTINATION OF CIRCUITS, AND IDENTIFY CIRCUITS ROUTED UNDERGROUND.
   - B. FOR CIRCUITS WITHOUT UNDERGROUND PORTIONS, BUILDING FLOOR PLANS SHOW LOCATION OF EQUIPMENT FOR DETERMINING CIRCUIT LENGTH WITHIN THE STRUCTURE. FOR CIRCUITS WITH UNDERGROUND PORTIONS, ANTICIPATED PENETRATION OF UNDERGROUND CONDUITS ARE SHOWN ON STRUCTURE PLANS FOR DETERMINING THE LENGTH OF THE IN-STRUCTURE PORTIONS OF CIRCUITS. BUILDING FLOOR PLANS MAY ALSO SHOW HOME RUNS FOR LIGHTING, RECEPTACLE, AND OTHER MISCELLANEOUS EQUIPMENT CIRCUITS.
   - C. SITE PLANS INDICATE THE GENERAL ROUTING OF UNDERGROUND CONDUITS AND DUCT BANKS. CIRCUITS ROUTED IN UNDERGROUND CONDUITS OR DUCT BANKS ARE INDICATED IN DUCT BANK SECTIONS REFERENCED ON THE SITE PLAN.
   - D. DUCT BANK SECTIONS AND SCHEDULES IDENTIFY CONDUIT SIZE, CONDUIT MATERIAL, ARRANGEMENT OF THE UNDERGROUND CONDUITS, AND CIRCUITS ROUTED IN EACH UNDERGROUND CONDUIT.

AREA DESIGNATIONS

THE SPECIAL AREA DESIGNATION BOXES, AS DEFINED BELOW, ARE LOCATED ON THE PLAN DRAWINGS TO DEFINE ELECTRICAL INSTALLATION REQUIREMENTS. DESIGNATION BOXES ARE LOCATED WITHIN ROOM OR BELOW ROOM NUMBER. ALL INDOOR AREAS NOT INDICATED OTHERWISE ARE AREA TYPE 1 AND MINIMUM NEMA TYPE 1 ENCLOSURES.

AREA TYPE 1A	CORROSIVE CHEMICAL FEED AND STORAGE ROOMS. CONDUIT SYSTEM SHALL BE EXPOSED SCHEDULE 80 PVC RIGID NON-METALLIC CONDUIT WITH PVC FITTINGS, BOXES AND ACCESSORIES.
AREA TYPE 4	INDOOR WET LOCATIONS SUCH AS VAULTS, HOSEDOWN AREAS, BASEMENTS, ETC. MINIMUM NEMA TYPE 4 ENCLOSURE FOR EQUIPMENT AND GASKETED FITTINGS IN A CONDUIT SYSTEM.
AREA TYPE 7A	CLASS I, DIVISION 1 AREA AS DEFINED BY NEC. ALL EQUIPMENT AND CONDUIT SYSTEMS SHALL BE RATED FOR USE IN THIS AREA.
AREA TYPE 7B	CLASS I, DIVISION 2, GROUP C AND D (METHANE, GASOLINE) AS DEFINED BY NEC. EQUIPMENT AND CONDUITS SYSTEMS SHALL BE RATED FOR USE IN THIS AREA.
AREA TYPE 12	INDOOR, DRY, DIRTY AREA. REQUIRES MINIMUM NEMA TYPE 12 GASKETED ENCLOSURES FOR ALL EQUIPMENT AND GASKETED FITTINGS IN CONDUIT SYSTEMS.

GENERAL REQUIREMENTS

1. THE CONTRACTOR SHALL BE RESPONSIBLE FOR ROUTING ALL CONDUITS NOT SHOWN ON THE PLANS. THIS SHALL INCLUDE ALL CONDUITS SHOWN ON THE ONE-LINES AND HOME-RUNS SHOWN ON THE PLAN DRAWINGS. CONDUITS SHALL BE ROUTED AS DEFINED IN THE SPECIFICATION.
2. SPARE WIRES SHALL BE TAPED AND COILED AND LABELED TO INDICATE WHERE OTHER END OF SPARE WIRE IS LOCATED.
3. IF EQUIPMENT SUPPLIED BY MANUFACTURER HAS A LARGER LOAD THAN VALUE SHOWN, THE CABLE CONDUIT AND ELECTRICAL EQUIPMENT SHALL BE ENLARGED, AS REQUIRED, TO ACCOMMODATE THE HIGHER VALUE.
4. THE CONTRACTOR SHALL BE RESPONSIBLE FOR FURNISHING PROPERLY SIZED STARTER OVERLOADS FOR EQUIPMENT FURNISHED.
5. LIGHTING AND RECEPTACLE CIRCUITS DESIGNATED ON THE FLOOR PLANS ARE NOT SHOWN ON THE ONE-LINES. CONDUCTORS FOR LIGHTING, RECEPTACLES, AND MISCELLANEOUS 120VAC CIRCUITS SHALL BE MINIMUM NO. 12AWG. CONDUIT FOR LIGHTING, RECEPTACLES, AND MISCELLANEOUS 120VAC CIRCUITS SHALL BE MINIMUM 3/4".
6. IN AREAS WHERE THERE ARE OVERHEAD BRIDGE CRANES, HOISTS, ETC. NO CONDUITS SHALL BE RUN OVERHEAD THAT WILL INTERFERE WITH THE OPERATION OF THE EQUIPMENT.

ELECTRICAL ABBREVIATIONS

A

A	AMBER, AMPERE, ALARM
AC	ALTERNATING CURRENT
ACB	AIR CIRCUIT BREAKER
ACR	ACCESS CARD READER
AF	AMPERE FRAME
AFD	ADJUSTABLE FREQUENCY DRIVE
AFRD	ARC-FLASH REDUCTION DEVICE
AM	AMMETER
ANN	ANNUNCIATOR
AR	ALARM RELAY
AS	AMMETER SWITCH, AMPERE SENSOR
AT	AMPERE TRIP
ATS	AUTOMATIC TRANSFER SWITCH
AUX	AUXILIARY
AWG	AMERICAN WIRE GAUGE

B

B	BUS
BC	BATTERY CHARGER
BKR	BREAKER
BR	BRAKE
BT	BEARING TEMPERATURE

C

C	CLOSE, COUNTER, CONTACTOR, CONTROL, CCTV CAMERA
CAP	CAPACITOR
CB	CIRCUIT BREAKER
CB"A"	CIRCUIT BREAKER AUXILIARY CONTACT (OPEN WHEN BREAKER IS OPEN)
CB"B"	CIRCUIT BREAKER AUXILIARY CONTACT (CLOSED WHEN BREAKER IS OPEN)
CD	CONTROL DAMPER
CI	CELL INTERLOCK
CKT	CIRCUIT
CL2	CHLORINE
COS	CABLE OPERATED SWITCH
CP	CONTROL PANEL
CPT	CONTROL POWER TRANSFORMER
CR	CURRENT OF CONTROL RELAY, CARD READER
CS	CONTROL STATION
CT	CYCLE TIMER OR CURRENT TRANSFORMER
CTC	CYCLE TIMER CLUTCH
CTM	CYCLE TIMER MONITOR
2/C	2 CONDUCTOR
4"C	4" CONDUIT

D

DC	DIRECT CURRENT, DOOR CONTACT
DI	DOOR INTERLOCK
DM	DAMPER MOTOR, DEMAND METER, DIMMER SWITCH
DPDT	DOUBLE POLE DOUBLE THROW
DPST	DOUBLE POLE SINGLE THROW
DPR	DIFFERENTIAL PRESSURE REGULATOR
DPS	DIFFERENTIAL PRESSURE SWITCH
DS	DISCONNECT SWITCH, DOOR SWITCH, DESKTOP STATION
DVLS	DISCHARGE VALVE LIMIT SWITCH

E

E	ELECTRIC OPERATOR FOR CONTROL DAMPER OR VALVE
EC	EMPTY CONDUIT
EDS	ELECTRICAL DOOR STRIKE
EL	ELEVATION, EMERGENCY LIGHT
EMH	ELECTRICAL MANHOLE
ER	ELECTRODE RELAY
ES	END SWITCH, REQUEST TO EXIT SENSOR
E-STOP	EMERGENCY STOP
ETM	ELAPSED TIME METER
EX	EXISTING
EXP	EXPLOSION PROOF

F

F	FORWARD, FIELD
FO	FIBER OPTIC
FPR	FEEDER PROTECTION RELAY
FS	FLOW SWITCH

G

G	GREEN, GROUND, GENERATOR, GROUND FAULT
GD	GROUND DETECTOR
GEN	GENERATOR
GFI	GROUND FAULT INTERRUPTOR
GLS	GEARED LIMIT SWITCH
GPR	GENERATOR PROTECTION RELAY
GND	GROUND
#8G	#8 GROUND WIRE

H

H	HIGH, HUMIDISTAT
HH	HANDHOLE
HMT	HIGH MOTOR TEMPERATURE
HOA	HAND-OFF-AUTO
HOR	HAND-OFF-REMOTE
HP	HORSEPOWER
HS	HAND STATION
HWCO	HIGH WATER CUTOFF
HZ	HERTZ (CYCLE)

I

I/O	INPUT/OUTPUT
I	INSTANTANEOUS
IJB	INTERCOM JUNCTION BOX

J

J,JB	JUNCTION BOX

K

K	KEY INTERLOCK
KAIC	THOUSAND AMPERES INTERRUPTING CURRENT
KCMIL	THOUSAND CIRCULAR MIL
KO	KEY OPERATED
KV	KILOVOLT
KVA	KILOVOLT AMPERE
KVAR	KILOVAR
KW	KILOWATT
KWH	KILOWATT HOUR

L

L	LOW, LEVEL, LONG-TIME
LA	LIGHTNING ARRESTER
LAN	LOCAL AREA NETWORK
LC	LIGHTING CONTRACTOR
LCP	LOCAL CONTROL PANEL
LCS	LOCAL CONTROL STATION
LOA	LOCAL-OFF-AUTO
LOR	LOCAL-OFF-REMOTE
LOS	LOCK OUT STOP
LP	LIGHTING PANEL
LS	LIMIT OR LEVEL SWITCH
LTG	LIGHTING
LWCO	LOW WATER CUTOFF

M

M	MAGNETIC MOTOR STARTER
MA	MILLIAMPERE
MCB	MAIN CIRCUIT BREAKER
MCC	MOTOR CONTROL CENTER
MCLU	MOTOR CONTROL LINEUP
MD	MOISTURE DETECTOR, MOTION DETECTOR
MDL	MAGNETIC DOOR LOCK
MFR	MANUFACTURER
MH	MANHOLE, MOUNTING HEIGHT
MOV	MOTOR OPERATED VALVE
MPR	MOTOR PROTECTION RELAY
MS	MANUAL MOTOR STARTER
MSH	MOTOR SPACE HEATER
MTS	MANUAL TRANSFER SWITCH
MV	MILLIVOLT, MEDIUM VOLTAGE
MVA	MEGAVOLT AMPERE

N

N	NEUTRAL
NGR	NEUTRAL GROUNDING RESISTOR
NGT	NEUTRAL GROUNDING TRANSFORMER
NC	NORMALLY CLOSED
NO	NORMALLY OPEN, NUMBER

O

O	OPEN
OL	OVERLOAD
OOA	ON-OFF-AUTO
OOR	ON-OFF-REMOTE
O/U	OVER/UNDER

P

P	PRIMARY, POWER, POLE
PCS	PLANT CONTROL SYSTEM
PB	PUSH BUTTON, PULL BOX
PF	POWER FACTOR
PFCC	POWER FACTOR CORRECTION CAPACITOR
PH	PHASE
PL	PILOT LIGHT
PLC	PROGRAMMABLE LOGIC CONTROLLER
PMR	POWER MONITORING RELAY
PP	POWER PANEL
PR	PAIR
PRS	PROXIMITY SWITCH
PS	PRESSURE SWITCH
PT	POTENTIAL TRANSFORMER, PROGRAM TIMER

Q

	NOT USED

R

R	RED, RAISE, RELAY, REVERSE
RECP	RECEPTACLE
RES	RESISTOR
RH	REMOTE HANDSET
RT	REPEATING TIMER
RTD	RESISTANCE TEMPERATURE DETECTOR
RTU	REMOTE TERMINAL UNIT
RVSS	REDUCED VOLTAGE SOLID STATE STARTER

S

S	SHORT-TIME, SHIELDED, STARTER
SA	SURGE ARRESTER, SPEAKER AMPLIFIER
SCADA	SUPERVISORY CONTROL AND DATA ACQUISITION
SF6	SULFUR HEXAFLOURIDE
SH	SPACE HEATER
SN	SOLID NEUTRAL
SO	SOLENOID OILER
SP	SINGLE POLE
SPD	SURGE PROTECTION DEVICE
SPDT	SINGLE POLE DOUBLE THROW
SPST	SINGLE POLE SINGLE THROW
SS	SELECTOR SWITCH, START/STOP
SSM	SOLID-STATE METERING
SSS	SOLID STATE STARTER
SST	SOLID-STATE TRIP
SUPV	SUPERVISORY CONTROL
SV	SOLENOID VALVE
SWB,SWBD	SWITCHBOARD
SWG,SWGR	SWITCHGEAR

T

T	THERMOSTAT, TIMER, TOTALIZER, TRANSFORMER
TACH	TACHOMETER
TB	TERMINAL BLOCK
TC	TIMER CLUTCH
TD	TIME DELAY RELAY
TEMP	TEMPERATURE
TM	TIMER MOTOR
TQ	TORQUE
TR	TIMER RELAY, TRIAD
TS	TEMPERATURE SWITCH
TTB	TELEPHONE TERMINAL BOARD

U

UG	UNDERGROUND
UPS	UNINTERRUPTIBLE POWER SUPPLY

V

V	VOLTS, VOLTAGE RESTRAINED
VA	VOLT AMPERE
VAR	VARMETER
VFD	VARIABLE FREQUENCY DRIVE
VI	VACUUM INTERRUPTER
VLS	VALVE LIMIT SWITCH
VM	VOLTMETER
VPI	VALVE POSITION INDICATOR
VS	VOLTMETER SWITCH

W

W	WHITE, WATTS
WH	WATTHOUR METER
WM	WATT METER
WP	WEATHERPROOF
WPI	WEATHERPROOF IN-USE
WS	WALL STATION

X

X	AUXILIARY RELAY
XFMR	TRANSFORMER
XP	EXPLOSION PROOF

Y

Y	YELLOW

Z

Z	AUXILIARY RELAY, IMPEDANCE
ZS	POSITION SWITCH
ZSS	ZERO SPEED SWITCH

1-1PR#16S	ONE, SINGLE PAIR, TWISTED SHIELDED #16 CABLE
3-7/C#14	THREE, SINGLE, SEVEN CONDUCTOR #14 MULTICONDUCTOR CONTROL CABLES

ISSUED FOR CONSTRUCTION

DATE	REVISIONS AND RECORD OF USE NO.	BY	CHK APP

RICHARD D. TAYLOR ★ LICENSE No 33376 ★ STATE OF FLORIDA ★ PROFESSIONAL ENGINEER

Date:
Engineer of Record: RICHARD D. TAYLOR
Florida License No.: NO. 33376

BLACK & VEATCH

Black & Veatch Corporation
2855 N. University Drive, Suite 210
Coral Springs, FL 33065 Certificate No. 8132

CITY OF KEY WEST
DENNIS STREET STORMWATER PUMP STATION IMPROVEMENTS

ELECTRICAL ABBREVIATIONS AND NOTES

DESIGNED: RNL
DETAILED: AJP
CHECKED: MAR
APPROVED: RTD
DATE: FEBRUARY 2019

0 1/2 1
IF THIS BAR DOES NOT MEASURE 1" THEN DRAWING IS NOT TO FULL SCALE

PROJECT NO. 193108

E-002
SHEET 28 OF 39

E-002.dwg
PRU81927, 2/28/2019 3:48:15 PM
PRU81927, 2/28/2019 3:53:50 PM

FD193108
D9000

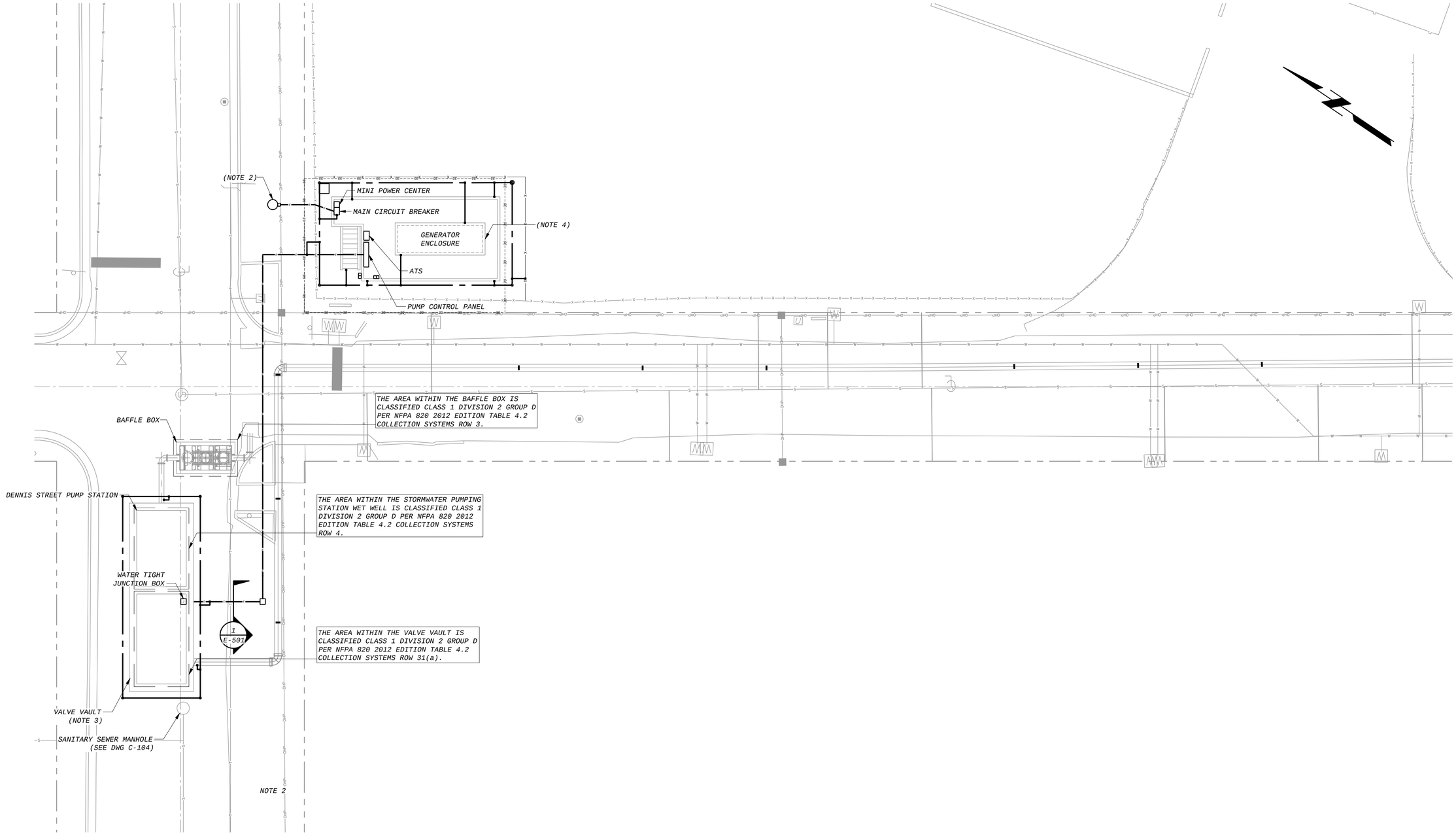

SITE PLAN

1" = 10'-0"

NOTES:

1. SEE DRAWINGS E-001 AND E-002 FOR ELECTRICAL LEGEND AND ABBREVIATIONS.
2. A NEW 480V, 3P, 4W UTILITY FEED WILL BE INSTALLED BY KEY WEST ENERGY ELECTRICAL UTILITY.
3. SEE DRAWINGS E-102 AND E-103 FOR ENLARGED VIEWS OF THE VALVE VAULT AND AND WETWELL.
4. SEE DRAWING E-102 FOR ENLARGED VIEW OF THE GENERATOR PLATFORM.

10' 5' 0 10' 20'

1"=10'

IF THIS BAR DOES NOT MEASURE 1" THEN DRAWING IS NOT TO FULL SCALE

ISSUED FOR CONSTRUCTION

DATE	REVISIONS AND RECORD OF USE	NO.	BY	CHK	APP

RICHARD D. TAYLOR ★ LICENSE No 33376 ★ STATE OF FLORIDA PROFESSIONAL ENGINEER

Date:
Engineer of Record: RICHARD D. TAYLOR
Florida License No.: No. 33376

BLACK & VEATCH

Black & Veatch Corporation
2855 N. University Drive, Suite 210
Coral Springs, FL 33065 Certificate No. 8132

CITY OF KEY WEST
DENNIS STREET STORMWATER PUMP STATION IMPROVEMENTS

ELECTRICAL SITE PLAN

DESIGNED: RNL
DETAILED: AJP
CHECKED: MAR
APPROVED: RTD
DATE: FEBRUARY 2019

PROJECT NO. 193108

E-101
SHEET 29 OF 39

E-101.dwg
PRU81927, 2/28/2019 3:49:03 PM
PRU81927, 2/28/2019 3:52:57 PM

FD193108
D9000

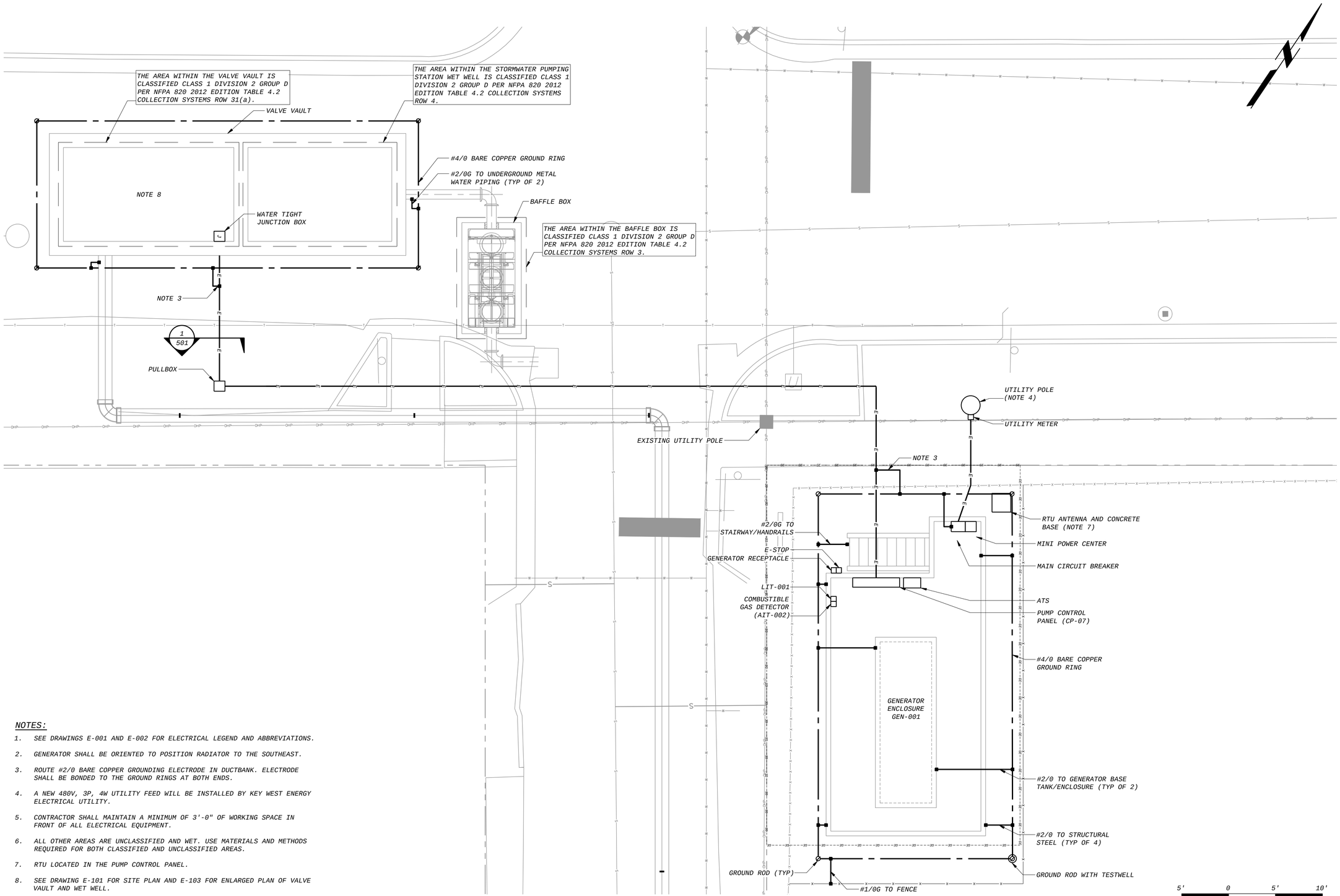

SITE PLAN
1" = 5'-0"

NOTES:

1. SEE DRAWINGS E-001 AND E-002 FOR ELECTRICAL LEGEND AND ABBREVIATIONS.
2. GENERATOR SHALL BE ORIENTED TO POSITION RADIATOR TO THE SOUTHEAST.
3. ROUTE #2/0 BARE COPPER GROUNDING ELECTRODE IN DUCTBANK. ELECTRODE SHALL BE BONDED TO THE GROUND RINGS AT BOTH ENDS.
4. A NEW 480V, 3P, 4W UTILITY FEED WILL BE INSTALLED BY KEY WEST ENERGY ELECTRICAL UTILITY.
5. CONTRACTOR SHALL MAINTAIN A MINIMUM OF 3'-0" OF WORKING SPACE IN FRONT OF ALL ELECTRICAL EQUIPMENT.
6. ALL OTHER AREAS ARE UNCLASSIFIED AND WET. USE MATERIALS AND METHODS REQUIRED FOR BOTH CLASSIFIED AND UNCLASSIFIED AREAS.
7. RTU LOCATED IN THE PUMP CONTROL PANEL.
8. SEE DRAWING E-101 FOR SITE PLAN AND E-103 FOR ENLARGED PLAN OF VALVE VAULT AND WET WELL.

ISSUED FOR CONSTRUCTION

DATE	REVISIONS AND RECORD OF USE NO.	BY	CHK	APP

RICHARD D. TAYLOR ★ LICENSE No 33376 ★ STATE OF FLORIDA ★ PROFESSIONAL ENGINEER

Date:
Engineer of Record: RICHARD D. TAYLOR
Florida License No.: NO. 33376

BLACK & VEATCH
Black & Veatch Corporation
2855 N. University Drive, Suite 210
Coral Springs, FL 33065
Certificate No. 8132

CITY OF KEY WEST
DENNIS STREET STORMWATER PUMP STATION IMPROVEMENTS

ELECTRICAL
POWER AND GROUNDING PLAN

DESIGNED: RNL
DETAILED: AJP
CHECKED: MAR
APPROVED: RTD
DATE: FEBRUARY 2019

0 1/2 1
IF THIS BAR DOES NOT MEASURE 1" THEN DRAWING IS NOT TO FULL SCALE

PROJECT NO.
193108

E-102
SHEET
30 OF 39

E-102.dwg
PRU81927, 2/28/2019 3:49:44 PM
PRU81927, 2/28/2019 3:52:20 PM

FD193108
D9000

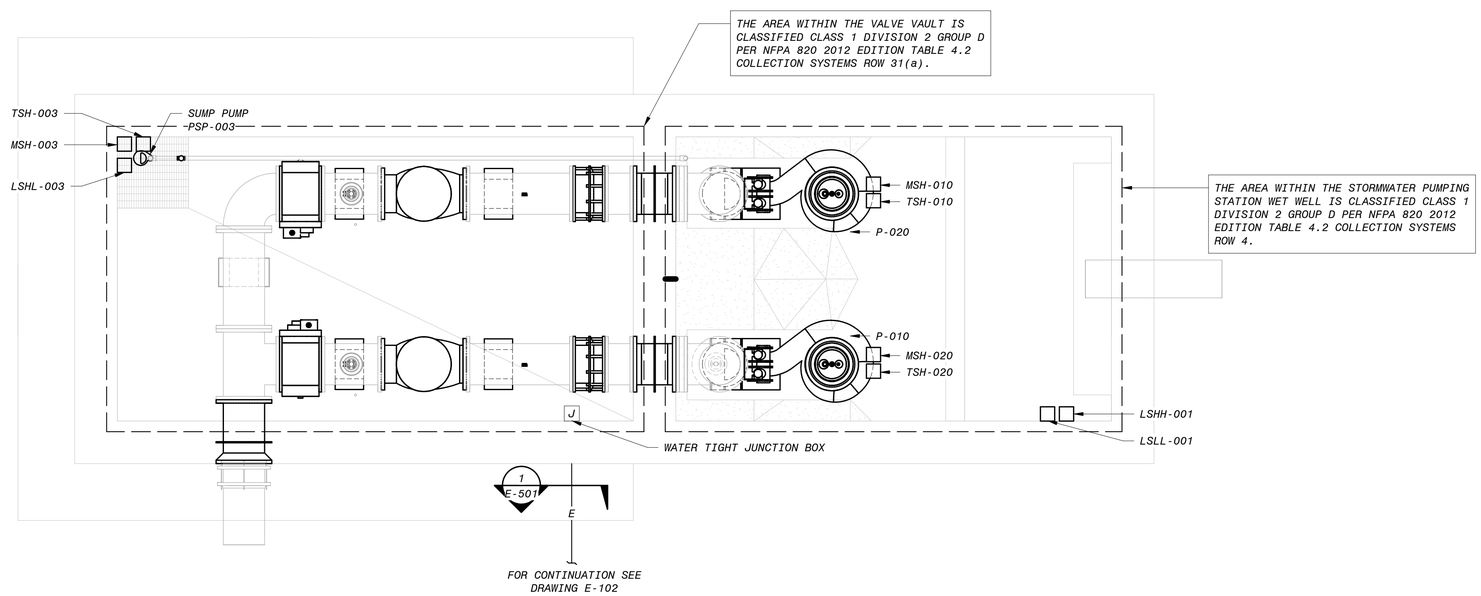

VALVE VAULT POWER PLAN

3/8" = 1'-0"

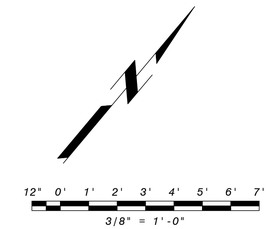

NOTES:

1. SEE DRAWINGS E-001 AND E-002 FOR ELECTRICAL LEGEND AND ABBREVIATIONS.
2. SEE DRAWING E-101 FOR SITE PLAN AND E-102 FOR ENLARGED SITE PLAN OF VALVE VAULT AND WETWELL.

ISSUED FOR CONSTRUCTION

DATE	REVISIONS AND RECORD OF USE	NO.	BY	CHK	APP

RICHARD D. TAYLOR ★ LICENSE No 33376 ★ STATE OF FLORIDA ★ PROFESSIONAL ENGINEER

Date:
Engineer of Record:
RICHARD D. TAYLOR
Florida License No.:
NO. 33376

BLACK & VEATCH

Black & Veatch Corporation
2855 N. University Drive, Suite 210
Coral Springs, FL 33065 Certificate No. 8132

CITY OF KEY WEST
DENNIS STREET STORMWATER PUMP STATION

ELECTRICAL
POWER & GROUNDING PLAN

DESIGNED: RNL
DETAILED: AJP
CHECKED: MAR
APPROVED: RTD
DATE: MARCH 2019

0 1/2 1
IF THIS BAR DOES NOT MEASURE 1" THEN DRAWING IS NOT TO FULL SCALE

PROJECT NO.
193108

E-103
SHEET
31 OF 39

PLOTTED: 3/1/2019 10:25:00 AM
D7000

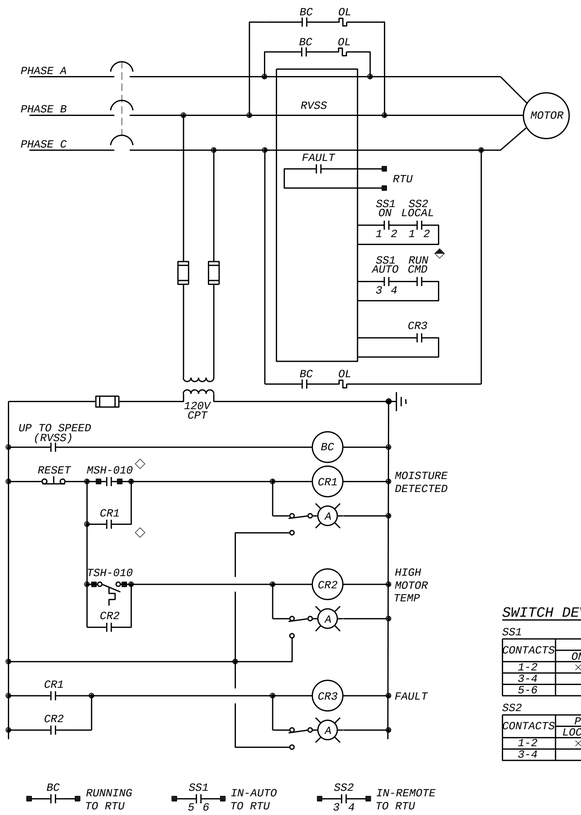

SUBMERSIBLE PUMP RVSS SCHEMATIC

TYP FOR P-010 AND P-020

SWITCH DEVELOPMENT:

SS1

CONTACTS	POSITION		
	ON	OFF	AUTO
1-2	×		
3-4			×
5-6			×

SS2

CONTACTS	POSITION	
	LOCAL	REMOTE
1-2	×	
3-4		×

SYMBOL LEGEND:

◇ AT DRIVEN EQUIPMENT

FROM RTU

DUCT BANK SCHEDULE

COND. NO.	SIZE	CIRCUIT NUMBER	REMARKS
1	2"	PCP7-2, PCP7-4, PCP7-6, PCP7-9	CONTROL WIRING FROM CP-07 TO VALVE VAULT
2	2"	PCP7-3	480V POWER FROM CP-07 TO P-010
3	2"	PCP7-5	480V POWER FROM CP-07 TO P-020
4	2"	MPC-4	120V POWER FROM MPC TO PSP-003
5	2"	BUBBLER AIR TUBING	AIR TUBING FROM BUBBLER CP-07 TO WETWELL
6	2"	SAMPLER TUBING	SAMPLER TUBING FROM AIT-002 TO WETWELL
S	2"		SPARE

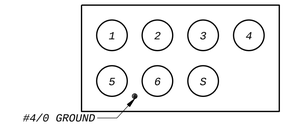

1 SECTION
E-101,E-102, E-103 NO SCALE

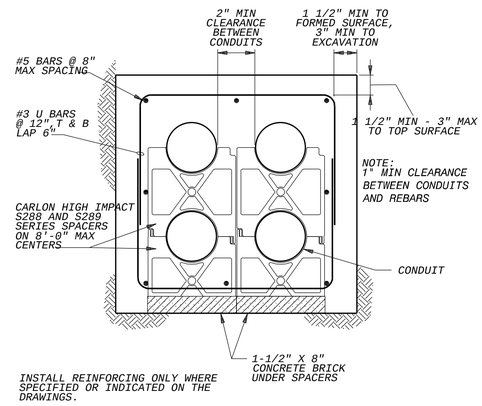

INSTALL REINFORCING ONLY WHERE SPECIFIED OR INDICATED ON THE DRAWINGS.

TYPICAL DUCT BANK SECTION

NO SCALE

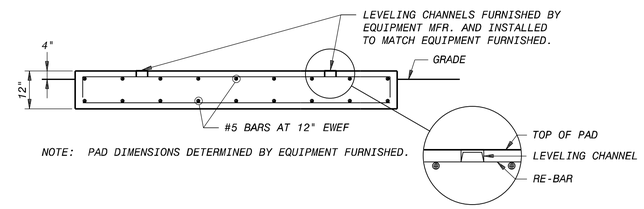

NOTE: PAD DIMENSIONS DETERMINED BY EQUIPMENT FURNISHED.

TYPICAL EQUIPMENT PAD DETAIL

NO SCALE

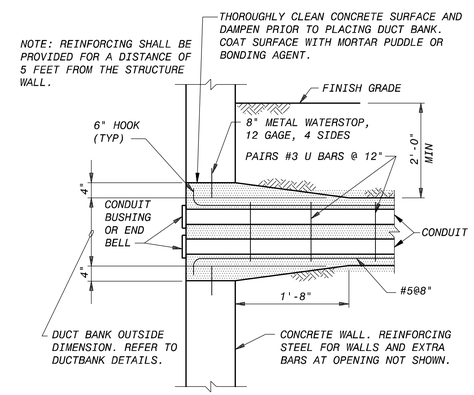

TYPICAL UNDERGROUND DUCT BANK ENTRANCE DETAIL

NO SCALE

NOTES:

1. SEE DRAWINGS E-001 AND E-002 FOR ELECTRICAL LEGEND AND ABBREVIATIONS.

ISSUED FOR CONSTRUCTION

DATE	REVISIONS AND RECORD OF USE NO.	BY	CHK	APP

RICHARD D. TAYLOR ★ LICENSE No 33376 ★ STATE OF FLORIDA ★ PROFESSIONAL ENGINEER

Date:
Engineer of Record: RICHARD D. TAYLOR
Florida License No.: No. 33376

BLACK & VEATCH

Black & Veatch Corporation
2855 N. University Drive, Suite 210
Coral Springs, FL 33065 Certificate No. 8132

CITY OF KEY WEST
DENNIS STREET STORMWATER PUMP STATION IMPROVEMENTS

ELECTRICAL
SCHEMATIC AND DETAILS

DESIGNED: RNL
DETAILED: AJP
CHECKED: MAR
APPROVED: RDT
DATE: FEBRUARY 2019

0 1/2 1
IF THIS BAR DOES NOT MEASURE 1" THEN DRAWING IS NOT TO FULL SCALE

PROJECT NO. 193108

E-501
SHEET 32 OF 39

E-501.dwg
PRU81927, 2/12/2019 2:42:26 PM
PRU81927, 2/28/2019 3:52:09 PM
FD193108
09000

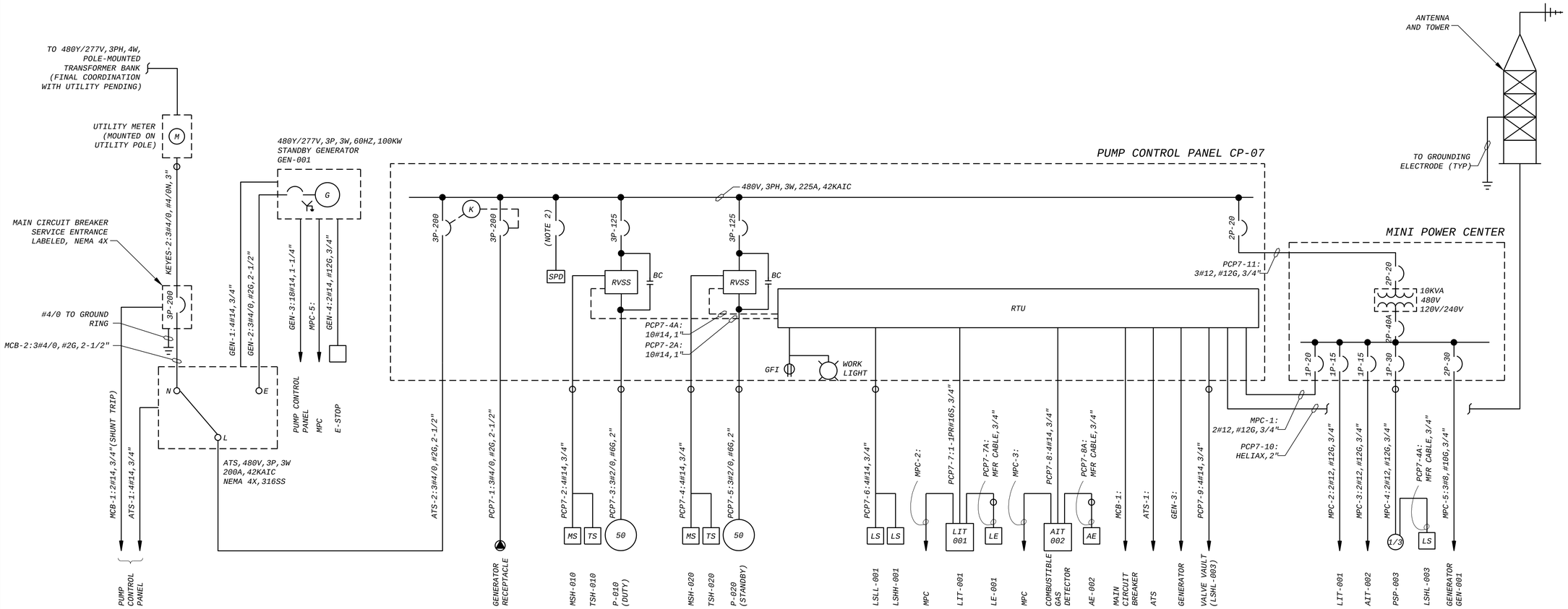

PUMP STATION RISER DIAGRAM

NO SCALE

NOTES:

1. SEE DRAWINGS E-001 AND E-002 FOR ELECTRICAL LEGEND AND ABBREVIATIONS.
2. CIRCUIT BREAKER FOR SPD SHALL BE SIZED BY THE PANEL MANUFACTURER.

ISSUED FOR CONSTRUCTION

DATE	REVISIONS AND RECORD OF USE NO.	BY	CHK	APP

RICHARD D. TAYLOR ★ LICENSE No 33376 ★ STATE OF FLORIDA PROFESSIONAL ENGINEER

Date:
Engineer of Record: RICHARD D. TAYLOR
Florida License No.: NO. 33376

BLACK & VEATCH

Black & Veatch Corporation
2855 N. University Drive, Suite 210
Coral Springs, FL 33065 Certificate No. 8132

CITY OF KEY WEST
DENNIS STREET STORMWATER
PUMP STATION IMPROVEMENTS

ELECTRICAL
RISER DIAGRAM

DESIGNED: RNL
DETAILED: AJP
CHECKED: MAR
APPROVED: RTD
DATE: FEBRUARY 2019

0 1/2 1
IF THIS BAR DOES NOT MEASURE 1" THEN DRAWING IS NOT TO FULL SCALE

PROJECT NO.
193108

E-801
SHEET
33 OF 39

E-801.dwg
PRU81927, 2/28/2019 3:50:51 PM
PRU81927, 2/28/2019 3:50:58 PM

FD193108
D9600

SYSTEM CODE - DENOTES ASSOCIATED SYSTEM STREAM
FUNCTION CODE - DENOTES ASSOCIATED EQUIPMENT ABBREVIATION
SEQUENCE CODE - UNIQUE ALPHA-NUMERIC IDENTIFIER

SSS - FFF - 999

EQUIPMENT IDENTIFICATION DESCRIPTION

PIPE SIZE - INCHES UNLESS OTHERWISE NOTED
PROCESS CODE - DENOTES ASSOCIATED PROCESS STREAM
SEQUENCE NUMBER - DENOTES PIPE NUMBER
MATERIAL CODE - DENOTES ASSOCIATED MATERIAL ABBREVIATION
INSULATION MATERIAL CODE - DENOTES ASSOCIATED INSULATION MATERIAL
INSULATION THICKNESS - DENOTES INSULATION THICKNESS
SPECIAL CODE

SSS - PPP - 999 - MTL - INS - THK - SPL

PIPELINE IDENTIFICATION DESCRIPTION

LINE SYMBOLS

- MAJOR PROCESS PIPING OR FLOW CHANNEL
- SECONDARY PROCESS PIPING
- MISCELLANEOUS PIPING
- SCREENED LINE DENOTES EXISTING PIPE OR EQUIPMENT
- DASHED LINE DENOTES FUTURE PIPE AND EQUIPMENT
- ELECTRIC SIGNAL
- HYDRAULIC SIGNAL
- PNEUMATIC SIGNAL
- SIGNAL CONNECTION POINT
- CONTROL SYSTEM BACKBONE NETWORK SIGNAL (ETHERNET)
- FIELD DEVICE NETWORK SIGNAL (ETHERNET)
- NON-STANDARD OR INDEPENDENT CONTROL SYSTEM NETWORK SIGNAL (AS NOTED ON DRAWINGS)

B | I-XX — SIGNAL LINE GOING TO ANOTHER SHEET

B | I-XX — SIGNAL LINE FROM ANOTHER SHEET (MATCH LETTERS)

B | I-XX — PROCESS LINE COMING/GOING TO/FROM ANOTHER SHEET

MATCH SHEET NO. IDENTIFIER
MATCH LINE NO.

B — SIGNAL CONNECTION WITHIN THE SAME SHEET

FLOW ARROW FOR PROCESS PIPING

PROCESS LINES CROSSING (NOT CONNECTED)

MECHANICAL EQUIPMENT SYMBOLS

- VAPORIZER: AMBIENT
- PARTICULATE FILTER
- ROTARY SCROLL COMPRESSOR
- AIR FILTER
- WATER FILTER: CARTRIDGE TYPE
- WATER FILTER: MEMBRANE TYPE
- MIXER
- COMPRESSOR
- VALVE: MATERIAL HANDLING ROTARY
- AIR REGULATOR
- STATIC MIXER
- HEAT EXCHANGER: TYPE 1
- HEAT EXCHANGER: TYPE 2
- HEAT EXCHANGER: FINNED TUBE
- HEAT EXCHANGER: SHELL & TUBE
- HEAT EXCHANGER: PLATE & FRAME
- HEAT EXCHANGER: SPIRAL
- HEAT EXCHANGER: DOUBLE PIPE
- HEAT EXCHANGER: AIR
- BOILER
- AFTERCOOLER
- FILTER SEPARATOR
- SILENCER
- HYDROCYCLONE

PUMP & BLOWER SYMBOLS

- CENTRIFUGAL PUMP OR OTHER TYPE NOT SPECIFIED
- SUBMERGED CENTRIFUGAL PUMP
- SCREW (LIFT) PUMP
- ROTARY PUMP
- PROGRESSING CAVITY PUMP
- POSITIVE DISPLACEMENT PUMP
- PLUNGER PUMP
- VERTICAL PUMP
- SUMP PUMP
- CENTRIFUGAL FAN
- CENTRIFUGAL BLOWER
- POSITIVE DISPLACEMENT BLOWER
- COMPRESSOR: RECIPROCATING
- COMPRESSOR: ROTARY SCREW
- COMPRESSOR: LIQUID RING
- MOTOR DRIVEN DIAPHRAGM METERING PUMP
- SOLENOID PUMP
- PERISTALTIC PUMP
- DRUM PUMP
- DOUBLE DIAPHRAGM PUMP
- ELECTRIC MOTOR

WATER & WASTEWATER SYMBOLS

- OZONE GENERATOR WITH POWER SUPPLY
- OZONE GENERATOR
- GRIT CONCENTRATOR & DEWATERING SCREW
- BAR SCREEN: MECHANICAL
- GRIT COLLECTOR: VORTEX TYPE
- RECTANGULAR BASIN
- SOLIDS COLLECTOR
- SOLIDS COLLECTOR W/SETTLING PLATES
- RECTANGULAR SEDIMENTATION BASIN
- UV HORIZONTAL BULBS
- MANUAL BAR SCREEN
- GAS FLARE
- GRIT CLASSIFIER
- GRAVITY FILTER
- GRAVITY THICKENER
- CIRCULAR SEDIMENTATION BASIN
- DAF
- BELT FILTER PRESS
- GRAVITY BELT THICKENER
- CENTRIFUGE
- RECTANGULAR SEDIMENTATION BASIN WITH SETTLING PLATES
- GRIT BASIN
- SLUDGE GRINDER: INLINE
- SLUDGE GRINDER: CHANNEL MOUNTED
- GRIT CONCENTRATOR

PRIMARY ELEMENT & FITTING SYMBOLS

- DIAPHRAGM SEAL
- PRIMARY FLOW ELEMENT: ORIFICE PLATE
- PRIMARY FLOW ELEMENT: FLUME
- PRIMARY FLOW ELEMENT: TURBINE OR PROPELLER-TYPE
- PRIMARY FLOW ELEMENT: ELECTROMAGNETIC
- THERMAL DISPERSION OR THERMAL MASS TYPE FLOW ELEMENT
- PRIMARY FLOW ELEMENT: TRANSIT-TIME ULTRASONIC
- FLOW CONDITIONER
- LE CON — CONDUCTANCE TYPE LEVEL SENSOR
- LE RAD — RADAR TYPE LEVEL SENSOR
- LE BUB — BUBBLER TYPE LEVEL SENSOR
- ANNULAR TYPE DIAPHRAGM SEAL
- PRIMARY FLOW ELEMENT: POSITIVE DISPLACEMENT
- PRIMARY FLOW ELEMENT: VENTURI TUBE, FLOW NOZZLE, OR FLOW TUBE. * SEE MEASUREMENT SYMBOL NOTATIONS LIST
- PRIMARY FLOW ELEMENT: WEIR
- PRIMARY FLOW ELEMENT: PITOT TUBE
- PRIMARY FLOW ELEMENT: CORIOLIS
- HORN OR SIREN
- FG — ROTAMETER
- LE US — ULTRASONIC TYPE LEVEL SENSOR
- LE DP — PRESSURE SENSING LEVEL SENSOR
- PILOT LIGHT
- REDUCER - CONCENTRIC
- REDUCER - ECCENTRIC
- FLANGE
- D — DRAIN - BELL-UP
- D — DRAIN - FUNNEL
- FLEXIBLE CONNECTION
- CAP
- PLUG
- T — TRAP
- FLAME CHECK
- SURGE CHAMBER
- FLAME ARRESTER
- SEDIMENT TRAP
- P — INSTRUMENT PURGE OR FLUSHING DEVICE
- UNION
- HOSE CONNECTION
- STRAINER - Y TYPE
- STRAINER - BASKET
- Q — QUICK CONNECT
- VENT
- VENT - SCREENED
- COUPLING
- LG — SIGHTGLASS
- MOISTURE SEPARATOR
- EXPANSION LOOP
- SUCTION DIFFUSER

CHEMICAL FEED EQUIPMENT SYMBOLS

- DIFFUSER: TANK
- DIFFUSER: CHANNEL
- INJECTOR
- RUPTURE DISK
- PULSATION DAMPNER
- CHLORINE CYLINDER
- VAPOR SUPERHEATER
- PRESSURE BUILDING COIL
- SPECTACLE, BLIND, CLOSED
- SPECTACLE, BLIND, OPEN
- CALIBRATION COLUMN
- EXPANSION TANK OR FUNNEL
- WEIGH SCALE
- DRIP LEG HEATER
- TOTE
- AS — AUTOMATIC SWITCHOVER
- PASTE TYPE LIME SLAKER
- EDUCTOR
- GAS FEEDER
- EVAPORATOR
- DRY CHEMICAL FEEDER
- TON CONTAINER
- POLYMER BLENDER FEEDER
- POLYMER BLENDER FEEDER
- POLYMER INJECTION RING
- DIFFUSER
- DIFFUSER - PLAN
- CO2 VAPORIZOR
- COMBINATION SHOWER/ EYEWASH FOUNTAIN
- EYEWASH FOUNTAIN
- SHOWER

VALVE & GATE SYMBOLS

- GATE: SLUICE OR SLIDE
- VALVE: GATE OR OTHER TWO-WAY TYPE NOT OTHERWISE IDENTIFIED
- VALVE: BALL
- VALVE: GLOBE
- VALVE: BUTTERFLY
- VALVE: ECCENTRIC PLUG
- VALVE: NON-ECCENTRIC PLUG
- VALVE: THREE WAY
- VALVE: FOUR WAY
- VALVE: CHECK
- VALVE: DIAPHRAGM
- VALVE: VPORT BALL
- VALVE: MUD
- VALVE: THERMAL SHUTOFF
- VALVE: NEEDLE
- VALVE: SLEEVE
- GATE: FLAP
- VALVE: VENTED BALL
- VALVE: DIVERTER
- VALVE: PRESSURE REDUCING
- VALVE: PRESSURE SUSTAINING
- VALVE: PRESSURE REDUCING (SELF ACTUATING TYPE)
- VALVE: PRESSURE SUSTAINING (SELF ACTUATING TYPE)
- P — VALVE: PILOT ACTUATED RELIEF
- VALVE: VACUUM RELIEF
- VALVE: PRESSURE RELIEF
- VALVE: PRESSURE/VACUUM RELIEF
- VALVE: ANGLE
- VALVE: SET STOP
- VALVE: PINCH
- VALVE: STOP CHECK
- VALVE: TELESCOPING
- VALVE: COMBINATION AIR
- VALVE: AIR RELEASE
- VALVE: AIR VACUUM
- VALVE: CHLORINE WITH YOKE
- M — CHLORINE VACUUM REGULATOR
- VALVE: KNIFE GATE
- BACKFLOW PREVENTER
- VACUUM BREAKER
- EXPLOSION RELIEF
- VALVE: GENERIC ROTARY

VALVE AND GATE ACTUATOR SYMBOLS

- HANDWHEEL ACTUATOR
- S — SOLENOID
- S R — SOLENOID - MANUAL RESET
- S R R — SOLENOID - REMOTE RESET
- PRESSURE BALANCED DIAPHRAGM
- M — INTELLIGENT ELECTRIC
- M SM — SMALL MOTOR ACTUATOR
- I/P — CURRENT - TO-PNEUMATIC ACTUATOR
- E/H — ELECTRIC-HYDRAULIC
- SPRING-DIAPHRAGM ACTUATOR OR OTHERWISE UNSPECIFIED
- P — PNEUMATIC ACTUATOR
- P DA — PNEUMATIC ACTUATOR DOUBLE ACTING
- P SC — PNEUMATIC ACTUATOR SPRING CLOSE
- P SO — PNEUMATIC ACTUATOR SPRING OPEN
- FLOAT OPERATED VALVE
- SPRING OR WEIGHT ACTUATED RELIEF OR SAFETY VALVE ACTUATOR LOADED VALVE
- QUICK OPENING VALVE
- QUICK CLOSING VALVE
- LOADING/BACK PRESSURE VALVE

MATERIAL HANDLING EQUIPMENT SYMBOLS

- CYCLONE SEPARATER
- DUMPSTER
- BIN: LIVE BOTTOM
- BIN: SLIDING FRAME
- SCREEN: SINGLE VIBRATORY
- SCREEN: DOUBLE VIBRATORY
- GRINDER
- BIN - CLOSED TOP
- BIN - OPEN TOP
- HORIZONTAL BAR SCREEN
- MIXER: PUGMILL
- MIXER: BLENDER
- CONVEYOR: BELT
- CONVEYOR: VIBRATORY
- H — PISTON CAKE PUMP: SINGLE
- H H — PISTON CAKE PUMP: DOUBLE
- CONVEYOR: SCREW
- HOPPER
- DUST HOPPER

GENERAL NOTES

1. IN GENERAL, THE P&ID SYMBOLS AND DEVICE IDENTIFICATIONS ARE BASED ON INTERNATIONAL SOCIETY OF AUTOMATION, STANDARD PRACTICE ANSI/ISA-5.1 (2009). SOME MODIFICATIONS, ADDITIONS, AND ALTERATIONS HAVE BEEN MADE AS NEEDED TO ACCOMMODATE THE PROJECT REQUIREMENTS.
2. SOME CONTROL AND INTERLOCK REQUIREMENTS WHICH CAN BE MORE CLEARLY ILLUSTRATED ON SCHEMATIC DRAWINGS HAVE BEEN OMITTED FROM THE P&ID DRAWINGS.
3. THIS IS A GENERAL LEGEND SHEET. SOME SYMBOLS AND ABBREVIATIONS MAY NOT BE UTILIZED ON THIS SPECIFIC PROJECT.
4. PIPING AND EQUIPMENT LEGEND APPLIES TO P&ID SHEETS ONLY AND MAY DIFFER FROM LEGENDS FOR OTHER SHEETS.

ISSUED FOR CONSTRUCTION

DATE	REVISIONS AND RECORD OF USE NO.	BY	CHK	APP

LAWRENCE BROUILLETTE LICENSE NO.57973 STATE OF FLORIDA PROFESSIONAL ENGINEER

Date:
Engineer of Record: LAWRENCE BROUILLETTE
Florida License No.: No. 57973

BLACK & VEATCH

Black & Veatch Corporation
2855 N. University Drive, Suite 210
Coral Springs, FL 33065
Certificate No. 8132

CITY OF KEY WEST
DENNIS STREET STORMWATER PUMP STATION

INSTRUMENTATION
LEGEND AND ABBREVIATIONS 1 OF 3

DESIGNED: BLB
DETAILED: MPR
CHECKED: LJB
APPROVED: LJB
DATE: MARCH 2019

0 1/2 1
IF THIS BAR DOES NOT MEASURE 1" THEN DRAWING IS NOT TO FULL SCALE

PROJECT NO. 193108

I-001
SHEET 34 OF 39

2016_AutoCAD_PID_Template_Imperial.dwg
RI092800, 2/28/2019 2:46:06 PM
RI092800, 2/28/2019 2:46:50 PM
FD193108
D9900

INSTRUMENT AND I/O ABBREVIATIONS
MEANINGS OF IDENTIFICATION LETTERS

LETTER	FIRST LETTER: MEASURED OR INITIATING VARIABLE	FIRST LETTER: VARIABLE MODIFIER	SUCCEEDING LETTERS: READOUT OR PASSIVE FUNCTION	SUCCEEDING LETTERS: OUTPUT OR ACTIVE FUNCTION	SUCCEEDING LETTERS: FUNCTION MODIFIER
A	ANALYSIS		ALARM		
B	BURNER, COMBUSTION		USER'S CHOICE	USER'S CHOICE	USER'S CHOICE
C	USER'S CHOICE			CONTROL	CLOSE
D	USER'S CHOICE	DIFFERENTIAL			DEVIATION
E	VOLTAGE (EMF)		SENSOR, PRIMARY ELEMENT		
F	FLOW, FLOW RATE	RATIO (FRACTION)			
G	USER'S CHOICE		GLASS, GAUGE, VIEWING DEVICE		
H	HAND (MANUALLY INITIATED)				HIGH
I	CURRENT (ELECTRICAL)		INDICATE		
J	POWER		SCAN		
K	TIME OR TIME-SCHEDULE	TIME RATE OF CHANGE		CONTROL STATION	
L	LEVEL		LIGHT		LOW
M	USER'S CHOICE	MOMENTARY			MIDDLE OR INTERMEDIATE
N	USER'S CHOICE		USER'S CHOICE	USER'S CHOICE	USER'S CHOICE
O	TORQUE		ORIFICE (RESTRICTION)		OPEN
P	PRESSURE OR VACUUM		POINT (TEST CONNECTION)		
Q	QUANTITY	INTEGRATE OR TOTALIZE	INTEGRATE OR TOTALIZE		
R	RADIATION		RECORD		RUN
S	SPEED OR FREQUENCY	SAFETY		SWITCH	STOP
T	TEMPERATURE			TRANSMIT	
U	MULTIVARIABLE		MULTIFUNCTION	MULTIFUNCTION	
V	VIBRATION OR MECHANICAL ANALYSIS			VALVE, DAMPER OR LOUVER	
W	WEIGHT OR FORCE		WELL, PROBE		
X	UNCLASSIFIED	X-AXIS	ACCESORY DEVICES OR UNCLASSIFIED	UNCLASSIFIED	UNCLASSIFIED
Y	EVENT, STATE, OR PRESENCE	Y-AXIS		AUXILIARY DEVICES	
Z	POSITION, DIMENSION	Z-AXIS		DRIVE, ACTUATOR OR FINAL CTRL ELEMENT	

GENERAL NOTES

1. IN GENERAL, THE P&ID SYMBOLS AND DEVICE IDENTIFICATIONS ARE BASED ON INTERNATIONAL SOCIETY OF AUTOMATION, STANDARD PRACTICE ANSI/ISA-5.1 (2009). SOME MODIFICATIONS, ADDITIONS, AND ALTERATIONS HAVE BEEN MADE AS NEEDED TO ACCOMMODATE THE PROJECT REQUIREMENTS.
2. SOME CONTROL AND INTERLOCK REQUIREMENTS WHICH CAN BE MORE CLEARLY ILLUSTRATED ON SCHEMATIC DRAWINGS HAVE BEEN OMITTED FROM P&ID DRAWINGS.
3. THIS IS A GENERAL LEGEND SHEET. SOME SYMBOLS AND ABBREVIATIONS MAY NOT BE UTILIZED ON THIS SPECIFIC PROJECT. PIPING AND EQUIPMENT LEGEND APPLIES TO P&ID SHEETS.

PIPELINE MATERIAL CODE ABBREVIATIONS

PCCP	SECTION 02612, PRESTRESSED CONCRETE CYLINDER PIPE
CBWS	SECTION 02614, CONCRETE BAR-WRAPPED, STEEL CYLINDER PIPE
LHCPP	SECTION 02616, LOW HEAD CONCRETE PRESSURE PIPE
RCP	SECTION 02618, CONCRETE PIPE
PVC	SECTION 15061, POLYVINYL CHLORIDE PIPE
DIP	SECTION 15061, DUCTILE IRON PIPE
SP	SECTION 15062, STEEL PIPE
LWS-XX	SECTION 15063, LIGHT WALL STEEL PIPE
SS-XX1	SECTION 15064, STAINLESS STEEL PIPE, TUBING, AND ACCESSORIES
CSG-XX	SECTION 15065, MISCELLANEOUS STEEL PIPE, TUBING, AND ACCESSORIES
CS-XX	SECTION 15065, MISCELLANEOUS STEEL PIPE, TUBING, AND ACCESSORIES
FRPE-XX	SECTION 15066, FIBERGLASS REINFORCED PLASTIC PIPE (EXHAUST AIR SERVICE)
FRP-XX	SECTION 15067, MISCELLANEOUS PLASTIC PIPE, TUBING, AND ACCESSORIES
PVC-XX	SECTION 15067, MISCELLANEOUS PLASTIC PIPE, TUBING, AND ACCESSORIES
CPVC-XX	SECTION 15067, MISCELLANEOUS PLASTIC PIPE, TUBING, AND ACCESSORIES
PE-XX	SECTION 15067, MISCELLANEOUS PLASTIC PIPE, TUBING, AND ACCESSORIES
PP-XX	SECTION 15067, MISCELLANEOUS PLASTIC PIPE, TUBING, AND ACCESSORIES
PVDF-XX	SECTION 15067, MISCELLANEOUS PLASTIC PIPE, TUBING, AND ACCESSORIES
RPT-XX	SECTION 15067, MISCELLANEOUS PLASTIC PIPE, TUBING, AND ACCESSORIES
SS	SECTION 15068, AWWA STAINLESS STEEL PIPE
CI-XX	SECTION 15069, CAST IRON SOIL PIPE AND ACCESSORIES
CU-XX	SECTION 15070, COPPER TUBING AND ACCESSORIES
BR-XX	SECTION 15060, MISCELLANEOUS PIPING AND PIPE ASSEMBLY
HS-XX	SECTION 15060, MISCELLANEOUS PIPING AND PIPE ASSEMBLY
TG-XX	SECTION 15060, MISCELLANEOUS PIPING AND PIPE ASSEMBLY
CRP-XX	SECTION 15060, MISCELLANEOUS PIPING AND PIPE ASSEMBLY

1. XX= numbers 01-20

INSTRUMENT AND I/O ABBREVIATION DEFINITIONS

AAH	ANALYZER ALARM HIGH
AAHH	ANALYZER ALARM HIGH-HIGH
AAL	ANALYZER ALARM LOW
AALL	ANALYZER ALARM LOW-LOW
AAX	ALARM HORN
AAL	STROBE ALARM LIGHT
AE	ANALYZER SENSOR
AI	ANALYZER INDICATION
AIT	ANALYZER INDICATING TRANSMITTER
ASH	ANALYZER SWITCH HIGH
ASHH	ANALYZER SWITCH HIGH-HIGH
CB	CONTROL BLOCK REFERENCE (SCADA LEVEL)
FAL	FLOW ALARM LOW
FAH	FLOW ALARM HIGH
FC	FLOW CONTROLLER
FI	FLOW DIGITAL INDICATOR (LED OR SCREEN)
FIC	FLOW INDICATING CONTROLLER
FE	PRIMARY FLOW ELEMENT/SENSOR
FG	FLOW SIGHT GAUGE
FIT	FLOW INDICATING TRANSMITTER
FQG	FLOW TOTALIZING GAUGE
FQIT	FLOW TOTALIZING INDICATING TRANSMITTER
FSH	FLOW SWITCH HIGH
FSL	FLOW SWITCH LOW
FY	FLOW SIGNAL CONVERTER, REPEATER, OR ISOLATOR
HIC	HAND INDICATING CONTROLLER
HMS	MOMENTARY PUSHBUTTON OR SELECTOR SWITCH
HS	HAND SWITCH
IE	CURRENT ELEMENT/SENSOR
IAH	CURRENT ALARM HIGH (MOTOR OVERLOAD)
ISH	CURRENT SWITCH HIGH USED TO DETECT HIGH TORQUE)
JA	POWER FAILURE ALARM
JI	POWER INDICATOR
JL	POWER INDICATING LIGHT
JIT	POWER INDICATING TRANSMITTER
KQI	TIME TOTALIZING INDICATOR
LAL	LEVEL ALARM LOW
LALL	LEVEL ALARM LOW-LOW
LAH	LEVEL ALARM HIGH
LAHH	LEVEL ALARM HIGH-HIGH
LE	PRIMARY LEVEL ELEMENT/SENSOR
LG	LEVEL SIGHT GAUGE
LI	LEVEL INDICATOR (LED OR SCREEN)
LSL	LEVEL SWITCH LOW
LSLL	LEVEL SWITCH LOW LOW
LSH	LEVEL SWITCH HIGH
LSHH	LEVEL SWITCH HIGH-HIGH
LY	LEVEL SIGNAL CONVERTER, ISOLATOR, OR REPEATER
OAH	TORQUE ALARM HIGH
OAHH	TORQUE ALARM HIGH HIGH
OSH	TORQUE SWITCH HIGH
OSHH	TORQUE SWITCH HIGH-HIGH
PAL	PRESSURE ALARM LOW
PALL	PRESSURE ALARM LOW-LOW
PAH	PRESSURE ALARM HIGH
PAHH	PRESSURE ALARM HIGH-HIGH
PDG	DIFFERENTIAL PRESSURE GAUGE
PDI	DIFFERENTIAL PRESSURE INDICATOR (LED OR SCREEN)
PDIT	DIFFERENTIAL PRESSURE INDICATING TRANSMITTER
PDAH	DIFFERENTIAL PRESSURE ALARM HIGH
PDAHH	DIFFERENTIAL PRESSURE ALARM HIGH-HIGH
PDSH	DIFFERENTIAL PRESSURE SWITCH HIGH
PDSHH	DIFFERENTIAL PRESSURE SWITCH HIGH-HIGH
PDSL	DIFFERENTIAL PRESSURE SWITCH LOW
PDSLL	DIFFERENTIAL PRESSURE SWITCH LOW-LOW
PE	PRESSURE SENSOR
PG	PRESSURE GAUGE
PI	PRESSURE INDICATOR (LED OR SCREEN)
PIT	PRESSURE INDICATING TRANSMITTER
PSL	PRESSURE SWITCH LOW
PSH	PRESSURE SWITCH HIGH
SI	SPEED INDICATION (LED OR SCREEN)
SC	SPEED CONTROL
SIT	SPEED INDICATING TRANSMITTER
SSL	SPEED SWITCH LOW
SIT	SPEED INDICATING TRANSMITTER
TAH	TEMPERATURE ALARM HIGH
TAHH	TEMPERATURE ALARM HIGH-HIGH
TAL	TEMPERATURE ALARM LOW
TDI	DIFFERENTIAL TEMPERATURE INDICATOR (LED OR SCREEN)
TDIT	DIFFERENTIAL TEMPERATURE TRANSMITTER
TE	TEMPERATURE SENSOR/RESISTANCE
TSH	TEMPERATURE SWITCH HIGH
TSHH	TEMPERATURE SWITCH HIGH HIGH
TSL	TEMPERATURE SWITCH LOW
TG	TEMPERATURE GAUGE
TI	TEMPERATURE INDICATOR (LED OR SCREEN)
TIT	TEMPERATURE INDICATING TRANSMITTER
UA	MULTIVARIABLE/COMMON ALARM/COMMON FAULT
UCR	RUN COMMAND
UCS	STOP COMMAND
VAH	VIBRATION ALARM HIGH
WE	PRIMARY WEIGHT SENSOR/LOAD CELL
WG	WEIGHT GAUGE
WIT	WEIGHT INDICATING TRANSMITTER
YA	GENERAL ALARM EVENT
YI	EVENT INDICATION (LED OR SCREEN)
YIR	RUNNING INDICATION
YIS	STOPPED INDICATION
YL	EVENT INDICATING LIGHT
YLR	RUNNING INDICATING LIGHT
YLS	STOPPED INDICATING LIGHT
ZI	POSITION INDICATOR
ZIC	CLOSED INDICATION
ZIO	OPEN INDICATION
ZLC	CLOSED INDICATING LIGHT
ZLO	OPEN INDICATING LIGHT
ZSC	CLOSED POSITION SWITCH
ZSO	OPEN POSITION SWITCH
ZIT	POSITION INDICATING TRANSMITTER
ZT	POSITION TRANSMITTER

GENERAL INSTRUMENT SYMBOLS

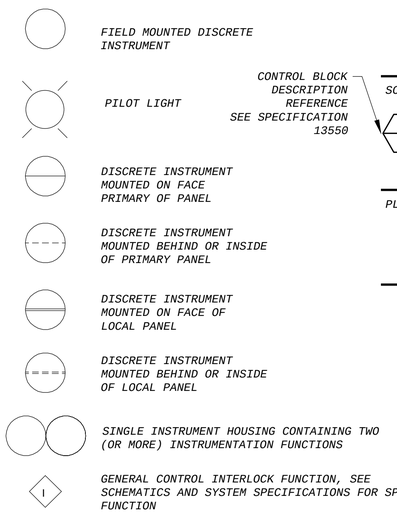

DIGITAL SYSTEMS INTERFACE SYMBOLS

NOTE: REFER TO DETAILED SYSTEM SPECIFICATIONS FOR FUNCTIONAL DESCRIPTION. ALSO SEE I/O SCHEDULES FOR COMPLETE INPUT AND OUTPUT LISTINGS.

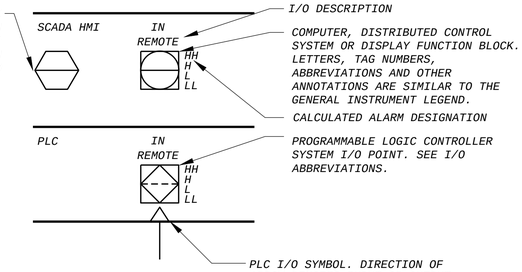

△ DISCRETE INPUT
▽ DISCRETE OUTPUT
▲ ANALOG INPUT
▼ ANALOG OUTPUT
△ PULSE INPUT

INSTRUMENTATION SYMBOLOGY AND DESIGNATIONS

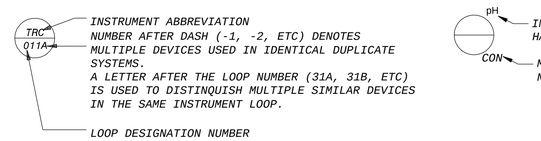

FUNCTION DESIGNATIONS AND ABBREVIATIONS

MEASUREMENT PRINCIPLE NOTATIONS

CON	CONDUCTANCE
DP	DIFFERENTIAL PRESSURE SENSING
FLN	FLOW NOZZLE
FLT	FLOW TUBE
GWR	GUIDED WAVE RADAR
RAD	RADAR
US	ULTRASONIC
VENT	VENTURI TUBE

CALCULATED ALARM DESIGNATIONS

L	LOW
LL	LOW-LOW
H	HIGH
HH	HIGH-HIGH

INDICATING LIGHT/ALARM DESIGNATIONS

OVRLD	OVERLOAD
TRQ HI	TORQUE HIGH
TRQ HI-HI	TORQUE HIGH-HIGH

INSTRUMENT FUNCTIONS

K	GAIN OR ATTENUATE (INPUT:OUTPUT)
-K	GAIN AND REVERSE
Σ	ADD OR SUM (ADD AND SUBTRACT)
Δ	SUBTRACT (DIFFERENCE)
√‾	EXTRACT SQUARE ROOT
÷	DIVIDE
F(X)	CHARACTERIZE SIGNAL
>	HIGH-SELECT
<	LOW-SELECT
×	MULTIPLY
∫	INTEGRATE (TIME INTEGRAL)
CH4	METHANE
CL2	CHLORINE RESIDUAL
CO2	CARBON DIOXIDE
DO	DISSOLVED OXYGEN
H2S	HYDROGEN SULFIDE
LEL	LOWER EXPLOSIVE LIMIT
MCC	MOTOR CONTROL CENTER
MLSS	MIXED LIQUOR SUSPENDED SOLIDS
02	OXYGEN (PURITY)
03	OZONE
pH	pH
TURB	TURBIDITY

HAND SWITCH DESIGNATIONS

FR	FORWARD-REVERSE
HOA	HAND-OFF-AUTO
HOR	HAND-OFF-REMOTE
LOA	LOCAL-OFF-AUTO
LOR	LOCAL-OFF-REMOTE
LR	LOCAL REMOTE
OCA	OPEN-CLOSE-AUTO
OOA	ON-OFF-AUTO
OC	OPEN-CLOSE
OO	ON-OFF
OOR	ON-OFF-REMOTE
OSC	OPEN-STOP-CLOSE
RST	RESET
SIL	SILENCE

TRANSDUCER & CONVERTER DESIGNATION

E	VOLTAGE
FSK	FREQUENCY SHIFT KEYING
H	HYDRAULIC
I	CURRENT
P	PNEUMATIC PULSE
PD	PULSE DURATION
PF	PULSE FREQUENCY
R	RESISTANCE (ELECTRICAL)

EXAMPLE: I/P = CURRENT TO PNEUMATIC TRANSDUCER

POWER SUPPLY ABBREVIATIONS

AS	AIR SUPPLY
ES	ELECTRIC SUPPLY
GS	GAS SUPPLY
HS	HYDRAULIC SUPPLY
NS	NITROGEN SUPPLY
SS	STEAM SUPPLY
WS	WATER SUPPLY
120V	120VAC

120V —— POWER SUPPLY SOURCE LABEL. USED ONLY WHERE NECESSARY TO HELP CLARIFY AN INSTRUMENT OR SYSTEM FUNCTION.

ISSUED FOR CONSTRUCTION

DATE	REVISIONS AND RECORD OF USE	NO.	BY	CHK	APP

LAWRENCE BROUILLETTE LICENSE NO.57973 STATE OF FLORIDA PROFESSIONAL ENGINEER

Date:
Engineer of Record: LAWRENCE BROUILLETTE
Florida License No.: No. 57973

BLACK & VEATCH
Black & Veatch Corporation
2855 N. University Drive, Suite 210
Coral Springs, FL 33065 Certificate No. 8132

CITY OF KEY WEST
DENNIS STREET STORMWATER PUMP STATION

INSTRUMENTATION
LEGEND AND ABBREVIATIONS 2 OF 3

DESIGNED: BLB
DETAILED: MPR
CHECKED: LJB
APPROVED: LJB
DATE: MARCH 2019

0 1/2 1
IF THIS BAR DOES NOT MEASURE 1" THEN DRAWING IS NOT TO FULL SCALE

PROJECT NO. 193108

I-002
SHEET 35 OF 39

2016_AutoCAD_PID_Template_Imperial.dwg
RIG92800, 2/28/2019 2:48:20 PM
RIG92800, 2/28/2019 2:48:37 PM

FD193108
D9000

SYSTEM CODE ABBREVIATIONS

ACE	ACETIC ACID
ACT	ACETYLENE
GAC	ACTIVATED CARBON - GRANULAR
AIR	AERATION AIR/PROCESS AIR
AER	AERATION SYSTEM
ARW	AIR WASH
ALS	ALUMINUM SULFATE
NSO4	AMMONIUM SULFATE
NH3	ANHYDROUS AMMONIA
AS	ANTI-SEALANT
NHOH	AQUA AMMONIA
ARG	ARGON
ASH	ASH
BWH	BACKWASH - MEMBRANE/FILTER
BAL	BALLASTED FLOCCULATION
BIO	BIOSOLIDS
BIT	BIOTOWER
BLS	BLENDED SLUDGE
BNR	BNR
BRN	BRINE
CACL	CALCIUM HYPOCHLORITE
CATS	CALCIUM THIOSULFATE
CO2	CARBON DIOXIDE
CAS	CARBON SLURRY
HCO3	CARBONIC ACID
CEN	CENTRATE
CEB	CHEMICAL ENHANCED BACKWASH - MEMBRANE
CL2	CHLORINE
CLO2	CHLORINE DIOXIDE
CA	CITRIC ACID
CIP	CLEAN IN PLACE
COA	COAGULATION
CAI	COMPRESSED AIR - INSTRUMENT
CMS	COMPRESSED AIR - SERVICE
CUS	COPPER SULFATE
CI	CORROSION INHIBITOR
DCL	DECHLORINATION
DET	DETERGENT
DWT	DEWATERING
FUE	DIESEL FUEL
DGG	DIGESTER GAS
DGM	DIGESTER GAS MIXING
DGS	DIGESTER SLUDGE
DGA	DIGESTION - AEROBIC
DIG	DIGESTION - ANAEROBIC
DCB	DISINFECTION CONTACT BASIN
DAF	DISSOLVED AIR FLOTATION
DRN	DRAINAGE
EFP	EFFLUENT PUMPING
EXH	ENGINE EXHAUST
EQB	EQUALIZATION BASIN
FEC	FERRIC CHLORIDE
FES	FERRIC SULFATE
FRC	FERROUS CHLORIDE
FRS	FERROUS SULFATE
FLT	FILTRATION
FLC	FLOCCULATION
GOX	GASEOUS OXYGEN
GSL	GASOLINE
GRS	GREASE
GRT	GRIT
HEL	HELIUM
HFL	HYDRAULIC FLUID
HCL	HYDROCHLORIC ACID
HFS	HYDROFLUOSILIC ACID (FLUORIDE)
HYD	HYDROGEN
PER	HYDROGEN PEROXIDE
INC	INCINERATION
INFP	INFLUENT PUMPING
INT	INTAKE
LAG	LAGOON STORAGE
LAP	LAND APPLICATION
CAH	LIME - HYDRATED
CAO	LIME - QUICKLIME
LIM	LIME STABILIZATION
LOX	LIQUID OXYGEN
LPG	LP GAS OR PROPANE GAS
MGOH	MAGNESIUM HYDROXIDE
MEM	MEMBRANE
MEG	METHANE GAS
MTH	METHANOL
MXL	MIXED LIQUOR
NG	NATURAL GAS
NIT	NITROGEN
NIO	NITROUS OXIDE
ODC	ODOR CONTROL
OIL	OIL
FO	OIL - FUEL
OZN	OZONE
OZD	OZONE DESTRUCT
PPP	PHOSPHATE
PO4	PHOSPHORIC ACID
PCL	POLYALUMINUM CHLORIDE
POLF	POLYMER
KMN	POTASSIUM PERMANGANATE
PAC	POWDERED ACTIVATE CARBON
PAR	PRE-AERATION
PSD	PRESEDIMENTATION
PRC	PRIMARY CLARIFICATION
PSC	PRIMARY SCUM
PRS	PRIMARY SLUDGE
WWP	RAW WASTEWATER PUMPING
RWP	RAW WATER PUMPING
RWS	RAW WATER STORAGE
RCS	RECIRCULATED SLUDGE
RCW	RECLAIMED WATER
REF	REFRIGERANT
RES	RESIDUALS
RAS	RETURN ACTIVATED SLUDGE
ROS	REVERSE OSMOSIS
SCR	SCREENINGS
SCL	SECONDARY CLARIFICATION
SSC	SECONDARY SCUM
SEP	SEPTAGE
SET	SETTLED WATER
SEW	SEWAGE
NAC	SODA ASH
NAL	SODIUM ALUMINATE
NAM	SODIUM ALUMINATE
NBC	SODIUM BICARBONATE
NHS	SODIUM BISULFITE
NCL	SODIUM CHLORIDE
NCL2	SODIUM CHLORITE
NAF	SODIUM FLUORIDE
NAX	SODIUM HEXAMETAPHOSPHATE
NAOH	SODIUM HYDROXIDE
NOCL	SODIUM HYPOCHLORITE
NASF	SODIUM SILICOFLUORIDE
STM	STEAM
STS	STORM SEWER
STW	STORM WATER
SO2	SULFUR DIOXIDE
HSO4	SULFURIC ACID
SW	SURFACE WASH
TERT	TERTIARY TREATMENT
TPRS	THICKENED PRIMARY SLUDGE
TWAS	THICKENED WASTE ACTIVATED SLUDGE
THCK	THICKENING
TW	TREATED WATER
TF	TRICKLING FILTER
UV	ULTRAVIOLET
VAC	VACUUM
WW	WASH WATER
WAS	WASTE ACTIVATED SLUDGE
WWW	WASTE WASH WATER
CDW	WATER - CONDENSATE
COLW	WATER - COOLING
DW	WATER - DISTILLED WATER
FW	WATER - FIRE
IRW	WATER - IRRIGATION
OZW	WATER - OZONATED
SWT	WATER - SEAL
HW	WATER - WATER HEATING
DEIW	WATER DEIONIZED
NPW	WATER NON-POTABLE
PEW	WATER PLANT EFFLUENT
PW	WATER POTABLE
RW	WATER RAW
WWT	WET WEATHER TREATMENT
ZOP	ZINC ORTHOPHOSPHATE

PROCESS CODE ABBREVIATIONS

ACE_X	ACETIC ACID
ACT_X	ACETYLENE
GAC_X	ACTIVATED CARBON - GRANULAR
AIR_X	AERATION AIR/PROCESS AIR
AER_X	AERATION SYSTEM
ARW_X	AIR WASH
ALS_X	ALUMINUM SULFATE
NSO4_X	AMMONIUM SULFATE
NH3_X	ANHYDROUS AMMONIA
AS_X	ANTI-SEALANT
NHOH_X	AQUA AMMONIA
ARG_X	ARGON
ASH_X	ASH
BWH_X	BACKWASH - MEMBRANE/FILTER
BAL_X	BALLASTED FLOCCULATION
BNR_X	BIOSOLIDS
BIO_X	BIOTOWER
BIT_X	BLENDED SLUDGE
BLS_X	BNR
BRN_X	BRINE
CACL_X	CALCIUM HYPOCHLORITE
CATS_X	CALCIUM THIOSULFATE
CO2_X	CARBON DIOXIDE
CAS_X	CARBON SLURRY
HCO3_X	CARBONIC ACID
CEN_X	CENTRATE
CEB_X	CHEMICAL ENHANCED BACKWASH - MEMBRANE
CL2_X	CHLORINE
CLO2_X	CHLORINE DIOXIDE
CA_X	CITRIC ACID
CIP_X	CLEAN IN PLACE
COA_X	COAGULATION
CAI_X	COMPRESSED AIR - INSTRUMENT
CMS_X	COMPRESSED AIR - SERVICE
CUS_X	COPPER SULFATE
CI_X	CORROSION INHIBITOR
DCL_X	DECHLORINATION
DET_X	DETERGENT
DWT_X	DEWATERING
FUE_X	DIESEL FUEL
DGG_X	DIGESTER GAS
DGM_X	DIGESTER GAS MIXING
DGS_X	DIGESTER SLUDGE
DGA_X	DIGESTION - AEROBIC
DIG_X	DIGESTION - ANAEROBIC
DCB_X	DISINFECTION CONTACT BASIN
DAF_X	DISSOLVED AIR FLOTATION
DRN_X	DRAINAGE
EFP_X	EFFLUENT PUMPING
EXH_X	ENGINE EXHAUST
EQB_X	EQUALIZATION BASIN
FEC_X	FERRIC CHLORIDE
FES_X	FERRIC SULFATE
FRC_X	FERROUS CHLORIDE
FRS_X	FERROUS SULFATE
FLT_X	FILTRATION
FLC_X	FLOCCULATION
GOX_X	GASEOUS OXYGEN
GSL_X	GASOLINE
GRS_X	GREASE
GRT_X	GRIT
HEL_X	HELIUM
HFL_X	HYDRAULIC FLUID
HCL_X	HYDROCHLORIC ACID
HFS_X	HYDROFLUOSILIC ACID (FLUORIDE)
HYD_X	HYDROGEN
PER_X	HYDROGEN PEROXIDE
INC_X	INCINERATION
INFP_X	INFLUENT PUMPING
INT_X	INTAKE
LAG_X	LAGOON STORAGE
LAP_X	LAND APPLICATION
CAH_X	LIME - HYDRATED
CAO_X	LIME - QUICKLIME
LIM_X	LIME STABILIZATION
LOX_X	LIQUID OXYGEN
LPG_X	LP GAS OR PROPANE GAS
MGOH_X	MAGNESIUM HYDROXIDE
MEM_X	MEMBRANE
MEG_X	METHANE GAS
MTH_X	METHANOL
MXL_X	MIXED LIQUOR
NG_X	NATURAL GAS
NIT_X	NITROGEN
NIO_X	NITROUS OXIDE
ODC_X	ODOR CONTROL
FO_X	OIL
OIL_X	OIL - FUEL
OZN_X	OZONE
OZD_X	OZONE DESTRUCT
PPP_X	PHOSPHATE
PO4_X	PHOSPHORIC ACID
PCL_X	POLYALUMINUM CHLORIDE
POLF_X	POLYMER
KMN_X	POTASSIUM PERMANGANATE
PAC_X	POWDERED ACTIVATE CARBON
PAR_X	PRE-AERATION
PSD_X	PRESEDIMENTATION
PRC_X	PRIMARY CLARIFICATION
PSC_X	PRIMARY SCUM
PRS_X	PRIMARY SLUDGE
WWP_X	RAW WASTEWATER PUMPING
RWP_X	RAW WATER PUMPING
RWS_X	RAW WATER STORAGE
RCS_X	RECIRCULATED SLUDGE
RCW_X	RECLAIMED WATER
REF_X	REFRIGERANT
RES_X	RESIDUALS
RAS_X	RETURN ACTIVATED SLUDGE
ROS_X	REVERSE OSMOSIS
SCR_X	SCREENINGS
SCL_X	SECONDARY CLARIFICATION
SSC_X	SECONDARY SCUM
SEP_X	SEPTAGE
SET_X	SETTLED WATER
SEW_X	SEWAGE
NAC_X	SODA ASH
NAL_X	SODIUM ALUMINATE
NAM_X	SODIUM ALUMINATE
NBC_X	SODIUM BICARBONATE
NHS_X	SODIUM BISULFITE
NCL_X	SODIUM CHLORIDE
NCL2_X	SODIUM CHLORITE
NAF_X	SODIUM FLUORIDE
NAX_X	SODIUM HEXAMETAPHOSPHATE
NAOH_X	SODIUM HYDROXIDE
NOCL_X	SODIUM HYPOCHLORITE
NASF_X	SODIUM SILICOFLUORIDE
STM_X	STEAM
STS_X	STORM SEWER
STW_X	STORM WATER
SO2_X	SULFUR DIOXIDE
HSO4_X	SULFURIC ACID
SW_X	SURFACE WASH
TERT_X	TERTIARY TREATMENT
TPRS_X	THICKENED PRIMARY SLUDGE
TWAS_X	THICKENED WASTE ACTIVATED SLUDGE
THCK_X	THICKENING
TW_X	TREATED WATER
TF_X	TRICKLING FILTER
UV_X	ULTRAVIOLET
VAC_X	VACUUM
WW_X	WASH WATER
WAS_X	WASTE ACTIVATED SLUDGE
WWW_X	WASTE WASH WATER
CDW_X	WATER - CONDENSATE
COLW_X	WATER - COOLING
DW_X	WATER - DISTILLED WATER
FW_X	WATER - FIRE
IRW_X	WATER - IRRIGATION
OZW_X	WATER - OZONATED
SWT_X	WATER - SEAL
HW_X	WATER - WATER HEATING
DEIW_X	WATER DEIONIZED
NPW_X	WATER NON-POTABLE
PEW_X	WATER PLANT EFFLUENT
PW_X	WATER POTABLE
RW_X	WATER RAW
WWT_X	WET WEATHER TREATMENT
ZOP_X	ZINC ORTHOPHOSPHATE

X = PROCESS CODE SUFFIX USED TO FURTHER SPECIFY A PROCESS STREAM (I.E. CL2_G FOR CHLORINE GAS OR CL2_S FOR CHLORINE SOLUTION)

FUNCTION CODE ABBREVIATIONS

ACMB	ACTIVATION CHAMBER
AFD	ADJUSTABLE FREQUENCY DRIVE
ACD	AERATOR, COARSE BUBBLE DIFFUSED
AEFD	AERATOR, FINE PORE DIFFUSED
AFS	AERATOR, FLOATING SURFACE
AES	AERATOR, SURFACE
AFC	AFTERCOOLER
AD	AIR DRYER
AF	AIR FILTER
AR	AIR RECEIVER OR REGULATOR
AS	AIR SEPARATOR
AST	AIR STRIPPER
BFP	BACKFLOW PREVENTER
BSNA	BASIN, AERATION
BSNX	BASIN, ANOXIC/OXIC
BNR	BASIN, BNR
BSNC	BASIN, CHLORINE CONTACT
BSNO	BASIN, OXIC
RBSN	BASIN, RECTANGULAR SEDIMENTATION
BFPS	BELT FILTER PRESS
B	BIN (STORAGE - ALL TYPES)
BA	BIN ACTIVATOR
BLC	BLOWER, CENTRIFUGAL
BL	BLOWER, POSITIVE DISPLACEMENT
BLR	BOILER
BDZ	BULLDOZER
CCLM	CALIBRATION COLUMN
CFG	CENTRIFUGE
CHF	CHEMICAL FEEDER
CGS	CHLORINE GAS SCRUBBER
PCLR	CLARIFIER, PRIMARY
SCLR	CLARIFIER, SECONDARY
CGR	CLASSIFIER, GRIT
CW	CLEARWELL
CMP	COMPRESSOR
CMB	COMPRESSOR, LIQUID RING
CMR	COMPRESSOR, ROTARY SCREW
CMPS	COMPRESSOR, STEAM
CTR	CONTAINER, PROCESS
COB	CONVEYOR, BELT
COS	CONVEYOR, SCREW
CFA	COVER, ALUMINUM DOME BASIN
CFD	COVER, FIXED DIGESTER
CFL	COVER, FLOATING DIGESTER
DCG	COVER, GAS HOLDER
DCM	COVER, MEMBRANE
CRN	CRANE
CRG	CRANE, GANTRY
CRJ	CRANE, JIB
CRP	CRANE, PORTABLE GANTRY
CRT	CRANE, TRAVELLING BRIDGE
CYL	CYLINDER, CHLORINE
CYG	CYLINDER, GAS
DWS	DEWATERING SCREW
DPS	DIAPHRAGM SEAL
DIF	DIFFUSER, CHANNEL
DFB	DIFFUSER BANK
DIP	DIFFUSER, PIPELINE
DIR	DIFFUSER, TANK
DGE	DIGESTER, AEROBIC
DGAP	DIGESTER, ANAEROBIC PRIMARY
DGAS	DIGESTER, ANAEROBIC SECONDARY
DSUV	DISINFECTION UNIT, UV
DAF	DISSOLVED AIR FLOTATION THICKENER
DUC	DUST COLLECTOR
EDC	EDUCTOR
EQPE	ELECTRICAL EQUIPMENT, GENERAL
EWSH	EMERGENCY EYE WASH FOUNTAIN
ESHR	EMERGENCY SHOWER
EMEW	EMERGENCY SHOWER & EYEWASH
EQPB	EQUIPMENT, BUILDING SERVICES
EQPT	EQUIPMENT, GENERAL OR UNSPECIFIED
EV	EVAPORATOR
EXC	EXPANSION CHAMBER
FAX	FAN, AXIAL FLOW
FAN	FAN, CENTRIFUGAL
FST	FENCE STIRRER
FTSP	FILTER GAS PARTICULATE
FLC	FILTER, CARTRIDGE TYPE
FLT	FILTER, UNDERDRAINS OR PRESSURE
FSW	FILTER. SURFACE WASH EQUIPMENT
FTTNG	FITTING, MISCELLANEOUS
FAR	FLAME ARRESTER
FC	FLAME CHECK
FLCH	FLOCCULATOR, HORIZONTAL
FLCV	FLOCCULATOR, VERTICAL
FD	FLOOR DRAIN
FS	FLOW SPLITTER
FE	FLUME, PARSHALL
FMSP	FOAM SEPARATOR
FL	FORKLIFT
CHF	GAS FEEDER
GF	GAS FLARE
GWH	GAS WATER HEATER
GFL	GATE, FLAP
GSD	GATE, SLIDE
GSC	GATE, SLUICE
G	GATE, WEIR
GEN	GENERATOR, ENGINE (BACKUP POWER)
GBT	GRAVITY BELT THICKENER
GVT	GRAVITY THICKENER
GRD	GRINDER PULVERIZER
GRB	GRIT BASIN, VORTEX TYPE
GRV	GRIT SCREW CONCENTRATOR
HEX	HEAT EXCHANGER
HST	HOIST
HSC	HOIST, CHAIN
HSE	HOIST, WIRE ROPE
HYDF	HYDRANT, FIRE
HYDW	HYDRANT, WALL
HYC	HYDROCYCLONE
INJ	INJECTOR, CHEMICAL
LS	LIME SLAKER
MFM	MEMBRANE
MBMF	MEMBRANE, MICROFILTRATION
MBNF	MEMBRANE, NANOFILTRATION
MBRO	MEMBRANE, REVERSE OSMOSIS
MBUF	MEMBRANE, ULTRAFILTRATION
MXC	MIXER, CARBON
FLM	MIXER, FLOCCULATION
M	MOTOR
MXI	MIXER, IN-LINE
MXPG	MIXER, PUGMILL
MXR	MIXER, RAPID
MXS	MIXER, STATIC
MXP	MIXER, SUBMERSIBLE, PROP OR BLENDER
MM	MUFFIN MONSTER
ORD	OVERFLOW ROOF DRAIN
ODU	OZONE DESTRUCT UNIT
OGEN	OZONE GENERATOR
PSU	OZONE POWER SUPPLY UNIT
PP	PACKAGED PLANT
PCN	PARTICLE COUNTER
PLT	PELLETIZER
PS	PENSTOCK
PIPE	PIPE
PSE	PLATE SETTLER
INJ	POLYMER INJECTOR RING
PBC	PRESSURE BUILDING COIL
PD	PULSATION DAMPNER
PAD	PUMP, AIR DIAPHRAGM
PCL	PUMP, CENTRIFUGAL
PDM	PUMP, DIAPHRAGM METERING
PHW	PUMP, HEATING WATER
PHE	PUMP, HORIZONTAL END SUCTION
PSC	PUMP, HORIZONTAL SPLIT CASE
PPS	PUMP, PERISTALTIC
PPL	PUMP, PLUNGER
PPC	PUMP, PROGRESSING CAVITY
PSE	PUMP, SCREW ENCLOSED
PSE	PUMP, SCREW OPEN
PCL	PUMP, SUBMERSIBLE
PCH	PUMP, SUBMERSIBLE CHOPPER
PSS	PUMP, SUBMERSIBLE SUMP
PSP	PUMP, SUMP
P	PUMP, POSITIVE DISPLACEMENT, ROTARY, DRUM OR BELL MOUNTED
PVD	PUMP, VERTICAL DIFFUSION VANE
PVE	PUMP, VERTICAL END SUCTION
PVW	PUMP, VERTICAL WET PIT
RSV	RESERVOIR
RCO	RESIDUAL COLLECTOR
RM	ROTAMETER
RD	RUPTURE DISK
SAMP	SAMPLER
SCL	SCALE
SC	SCALE, WEIGHT
SCRHT	SCREEN, HORIZONTAL
SCRI	SCREEN, INLINE SLUDGE
SCRA	SCREEN, MANUAL OR MECH CLEANED BAR
SCRS	SCREEN, STEP
SCT	SCREEN, TRAVELLING WATER
SCR	SCREEN, VIBRATORY
SCU	SCRUBBER
SMC	SCUM COLLECTOR
SCW	SCUM WEIR - ROTATING
SEP	SEPARATOR, MOISTURE OR CYCLONE
SGT	SIGHT GLASS - TALL
SG	SIGHT GAUGE
SIL	SILENCER
SLC	SLUDGE COLLECTOR, CIRCULAR
GCLR	SLUDGE COLLECTOR, CROSS
SFC	SLUDGE COLLECTOR, FLOC-CLARIFYING
SCS	SLUDGE COLLECTOR, SEC CLARIFIERS
SSC	SLUDGE COLLECTOR, SOLIDS CONTACT
SLCS	SLUDGE COLLECTOR, STRAIGHT LINE
GRD	SLUDGE GRINDER, INLINE OR CHANNEL
SBL	SOLIDS BLENDER-INLINE
STR	STRAINER
STRB	STRAINER BASKET TYPE
STRY	STRAINER Y TYPE
SRCH	SURGE CHAMBER
TSA	TANK, ABOVE GROUND STORAGE
TCN	TANK, AMMONIA STORAGE
TCR	TANK, CRYOGENIC STORAGE
DWT	TANK, DOUBLE WALL
TSE	TANK, ELEVATED STORAGE
TX	TANK, EXPANSION
TNK	TANK, FRP CHEMICAL STORAGE
TNK	TANK, GENERAL OR UNSPECIFIED
TCP	TANK, METHANOL
SMPT	TANK, SAMPLER
TCS	TANK, CHLORINE CONTACTOR
TSW	TANK, FLAT TOP STEEL WATER
TRP	TRAP, DRIP
TRPS	TRAP, SEDIMENT
TRK	TRUCK
TB	TURBINE
TBC	TURBINE COMPRESSOR
TBG	TURBINE ENGINE
UPS	UNINTERRUPTABLE POWER SUPPLY
UVE	UV REACTOR
UVL	UV REACTOR, HORIZONTAL OR VERTICAL
VB	VACUUM BREAK
VRG	VACUUM REGULATOR
AVR	VALVE, AIR RELEASE
AVRV	VALVE, AIR-VACUUM
VAG	VALVE, ANGLE
VBM	VALVE, AWWA BALL
VBF	VALVE, AWWA BUTTERFLY
VBFP	VALVE, BACKFLOW PREVENTER
VBM	VALVE, BALL MISCELLANEOUS
VCK	VALVE, CHECK
VCN	VALVE, CONE
VDG	VALVE, DIAPHRAGM OPERATED
VGD	VALVE, DOUBLE DISC GATE
VPE	VALVE, ECCENTRIC PLUG
VER	VALVE, EXPLOSION RELIEF
VFW	VALVE, FOUR WAY
VG	VALVE, GATE
V	VALVE, GENERAL OR UNSPECIFIED
VGL	VALVE, GLOBE
VBI	VALVE, INDUSTRIAL BUTTERFLY
VKG	VALVE, KNIFE GATE
VMR	VALVE, MATERIAL HANDLING ROTARY
VMD	VALVE, MUD
VND	VALVE, NEEDLE
PTV	VALVE, PILOT
VPN	VALVE, PINCH
VPO	VALVE, PISTON OPERATED
VPL	VALVE, NON-ECCENTRIC PLUG
VPC	VALVE, PRESSURE REDUCING
VPC	VALVE, PRESSURE SUSTAINING
VSP	VALVE, PRESSURE RELIEF
VSPV	VALVE, PRESSURE/VACUUM RELIEF
VP	VALVE, PROCESS
VGR	VALVE, RESILIENT SEATED GATE
VS	VALVE, SAFETY
VSLV	VALVE, SLEEVE
VSL	VALVE, SOLENOID
VTV	VALVE, TELESCOPING
VTS	VALVE, THERMAL SHUTOFF
VTW	VALVE, THREE WAY
VVB	VALVE, VACUUM BREAKER
VSV	VALVE, VACUUM RELIEF
VVP	VALVE, V-PORT BALL
VAP	VAPORIZER
VSLB	VESSEL, BOOT
WC	WEIR, CIPOLETTI
WR	WEIR, RECTANGULAR
WV	WEIR, V-NOTCH
WLHC	WELL, HORIZONTAL COLLECTOR
WLV	WELL, VERTICAL

ISSUED FOR CONSTRUCTION

DATE	REVISIONS AND RECORD OF USE	NO.	BY	CHK	APP

LAWRENCE BROUILLETTE LICENSE NO.57973 STATE OF FLORIDA PROFESSIONAL ENGINEER

Date:
Engineer of Record: LAWRENCE BROUILLETTE
Florida License No.: No. 57973

BLACK & VEATCH

Black & Veatch Corporation
2855 N. University Drive, Suite 210
Coral Springs, FL 33065 Certificate No. 8132

CITY OF KEY WEST
DENNIS STREET STORMWATER PUMP STATION

INSTRUMENTATION
LEGEND AND ABBREVIATIONS 3 OF 3

DESIGNED: BLB
DETAILED: MPR
CHECKED: LJB
APPROVED: LJB
DATE: MARCH 2019

0 1/2 1
IF THIS BAR DOES NOT MEASURE 1" THEN DRAWING IS NOT TO FULL SCALE

PROJECT NO. 193108

I-003
SHEET 36 OF 39

2016_AutoCAD_PID_Template_Imperial.dwg
RIG92800, 2/28/2019 2:49:29 PM
RIG92800, 2/28/2019 2:49:47 PM

FD193108
D9900

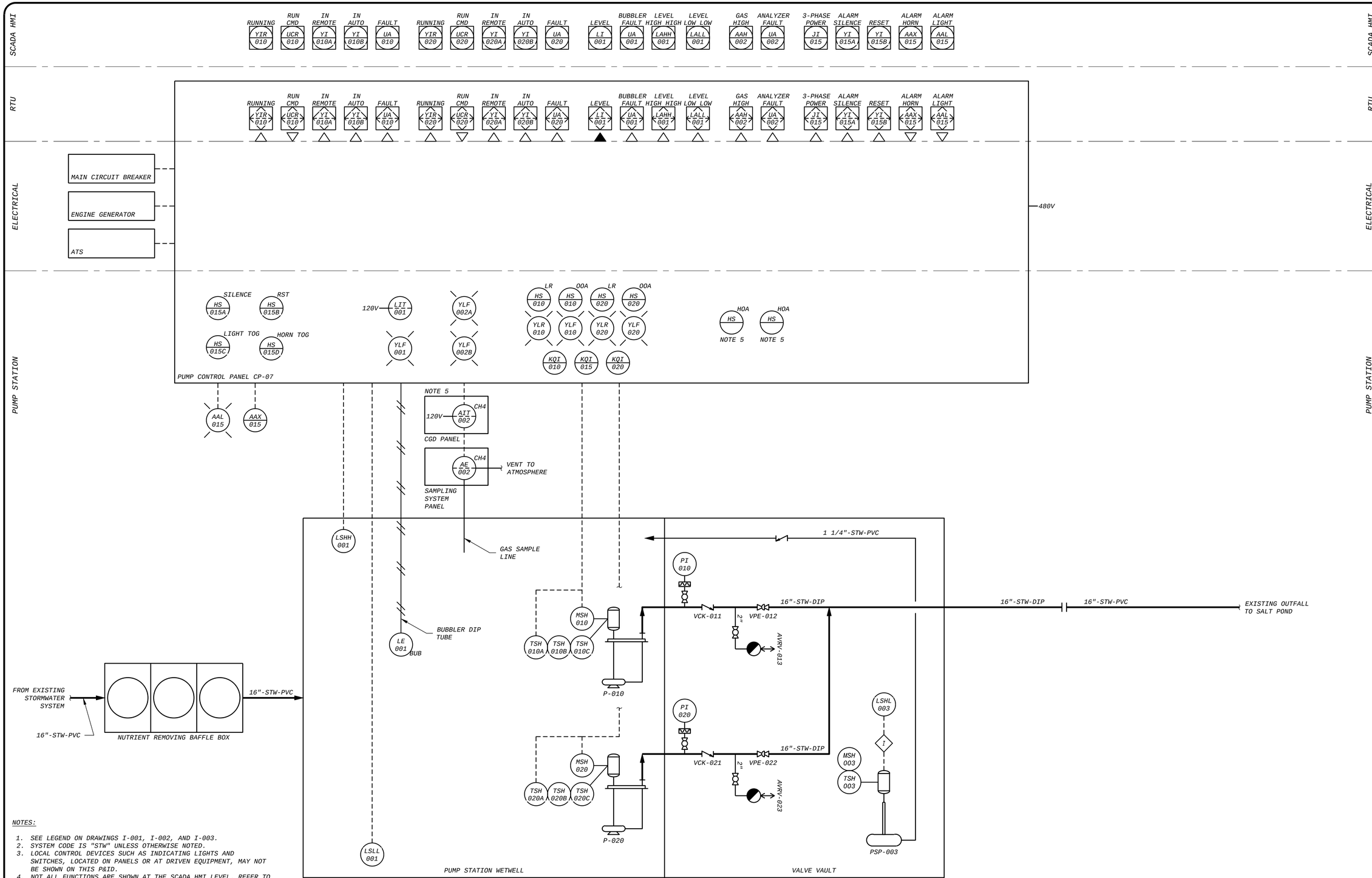

NOTES:

1. SEE LEGEND ON DRAWINGS I-001, I-002, AND I-003.
2. SYSTEM CODE IS "STW" UNLESS OTHERWISE NOTED.
3. LOCAL CONTROL DEVICES SUCH AS INDICATING LIGHTS AND SWITCHES, LOCATED ON PANELS OR AT DRIVEN EQUIPMENT, MAY NOT BE SHOWN ON THIS P&ID.
4. NOT ALL FUNCTIONS ARE SHOWN AT THE SCADA HMI LEVEL. REFER TO SOFTWARE CONTROL BLOCK DESCRIPTIONS IN SECTION 13550 FOR FURTHER DETAIL ON PLC, SCADA CONTROL, AND MONITORING.
5. HAND SWITCHES PROVIDE ADDITIONAL LOCAL CONTROL FOR PUMPS. SWITCHES INTEGRAL TO DFS TAC PACK RTU.
6. DESIGN AND ORIENTATION OF COMBUSTIBLE GAS ANALYZER, TRANSMITTER, AND SAMPLING SYSTEM BASED ON SENSIDYNE PRODUCT. SEE SPECIFICATION 13564.
7. FOR I/O AND INSTRUMENTATION DETAILS ON ELECTRICAL LAYER EQUIPMENT(GENERATOR, ATS, MAIN CIRCUIT BREAKER) SEE I-102.

ISSUED FOR CONSTRUCTION

DATE	REVISIONS AND RECORD OF USE	NO.	BY	CHK	APP

LAWRENCE BROUILLETTE LICENSE NO.57973 STATE OF FLORIDA PROFESSIONAL ENGINEER

Date:
Engineer of Record: LAWRENCE BROUILLETTE
Florida License No.: No. 57973

BLACK & VEATCH

Black & Veatch Corporation
2855 N. University Drive, Suite 210
Coral Springs, FL 33065 Certificate No. 8132

CITY OF KEY WEST
DENNIS STREET STORMWATER PUMP STATION

INSTRUMENTATION P&ID - PUMP STATION

DESIGNED: BLB
DETAILED: MPR
CHECKED: LJB
APPROVED: LJB
DATE: MARCH 2019

0 1/2 1
IF THIS BAR DOES NOT MEASURE 1" THEN DRAWING IS NOT TO FULL SCALE

PROJECT NO. 193108

I-101
SHEET 37 OF 39

2016_AutoCAD_PID_Template_Imperial.dwg
RIG92800, 2/28/2019 2:50:47 PM
RIG92800, 2/28/2019 2:51:05 PM

FD193108
D9000

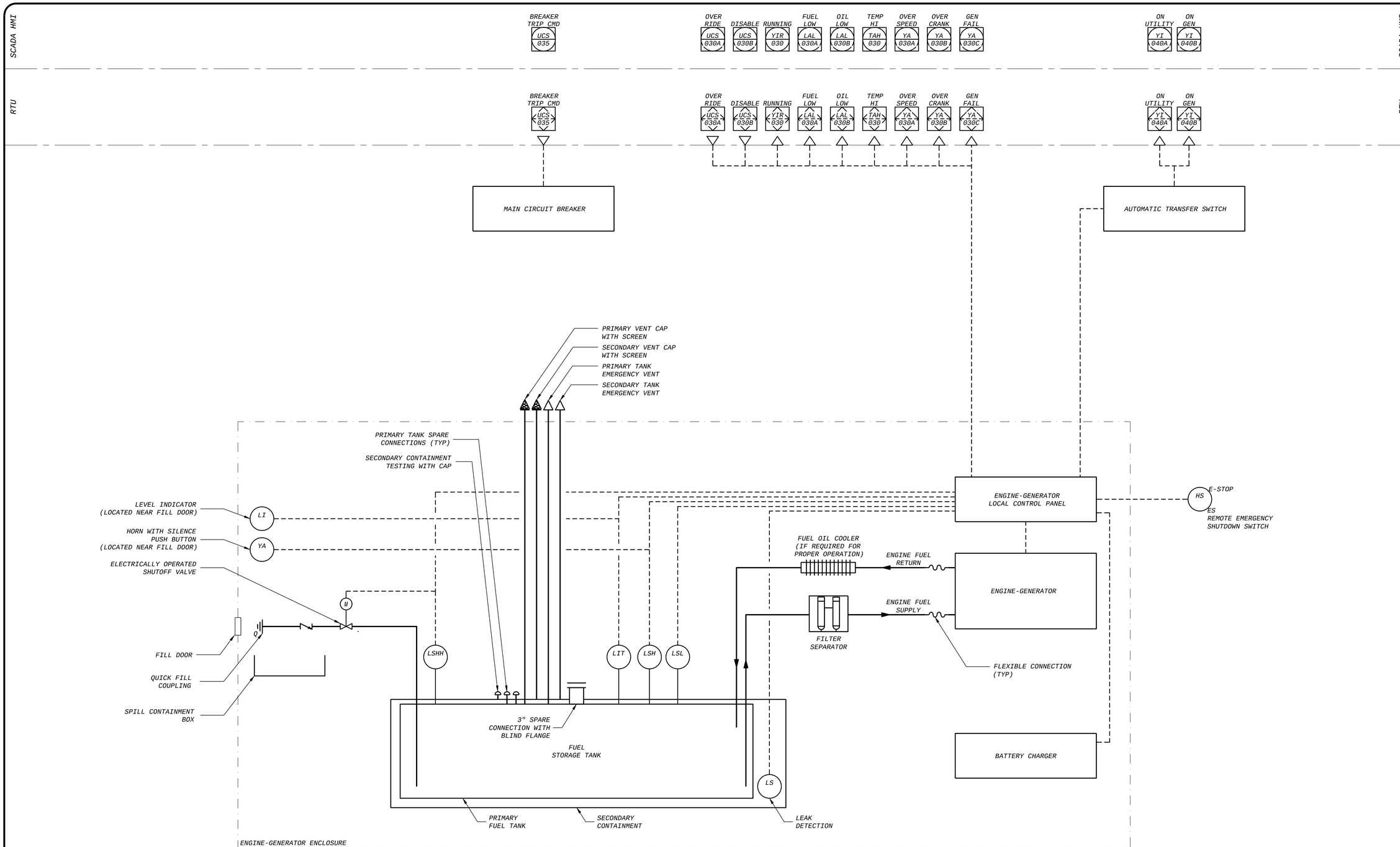

NOTES:

1. SEE LEGEND ON DRAWING I-001, I-002, AND I-003
2. SYSTEM CODE IS GEN UNLESS OTHERWISE NOTED.
3. LOCAL CONTROL DEVICES SUCH AS INDICATING LIGHTS AND SWITCHES LOCATED ON MCCs OR AT EQUIPMENT, MAY NOT BE INDICATED ON THIS P&ID.
4. CONTRACTOR SHALL BE RESPONSIBLE FOR PROVIDING AND INSTALLING ALL FLEXIBLE CONNECTORS AND EXPANSION JOINTS.
5. SEE ELECTRICAL DRAWINGS FOR ADDITIONAL DETAILS.

ISSUED FOR CONSTRUCTION

DATE	REVISIONS AND RECORD OF USE	NO.	BY	CHK	APP

LAWRENCE BROUILLETTE LICENSE NO.57973 STATE OF FLORIDA PROFESSIONAL ENGINEER

Date:
Engineer of Record: LAWRENCE BROUILLETTE
Florida License No.: No. 57973

BLACK & VEATCH
Black & Veatch Corporation
2855 N. University Drive, Suite 210
Coral Springs, FL 33065
Certificate No. 8132

CITY OF KEY WEST
DENNIS STREET STORMWATER PUMP STATION

INSTRUMENTATION
ENGINE GENERATOR

DESIGNED: BLB
DETAILED: MPR
CHECKED: LJB
APPROVED: LJB
DATE: MARCH 2019

0 1/2 1
IF THIS BAR DOES NOT MEASURE 1" THEN DRAWING IS NOT TO FULL SCALE

PROJECT NO.
193108

I-102
SHEET
38 OF 39

2016_AutoCAD_PID_Template_Imperial.dwg
RIG92800, 2/28/2019 2:51:52 PM
RIG92800, 2/28/2019 2:52:30 PM

FD9000
D9000

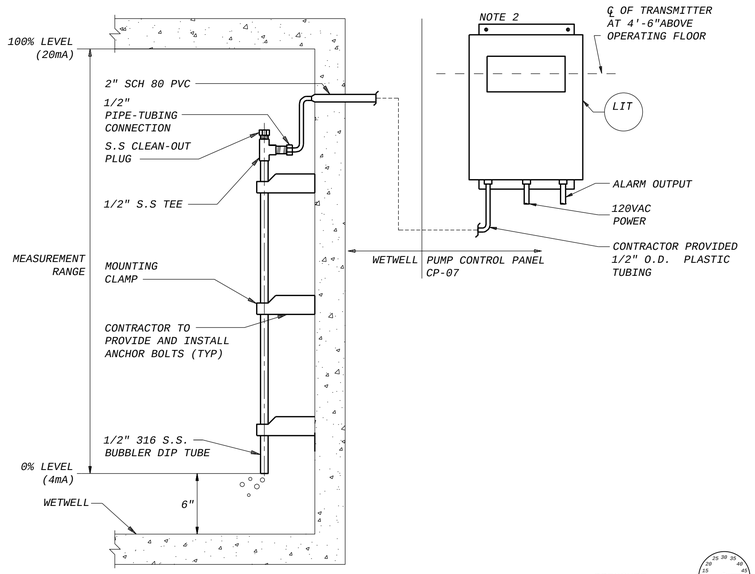

A BUBBLER LEVEL INSTALLATION DETAIL

I-501 NO SCALE

NOTES:
1. CONTRACTOR TO FIELD LOCATE CARRIER PIPE AND PENETRATION INTO WETWELL. ENGINEER TO APPROVE.
2. BUBBLER TRANSMITTER, COMPRESSORS, AND PIPING COMPONENTS ARE A PACKAGED SYSTEM.

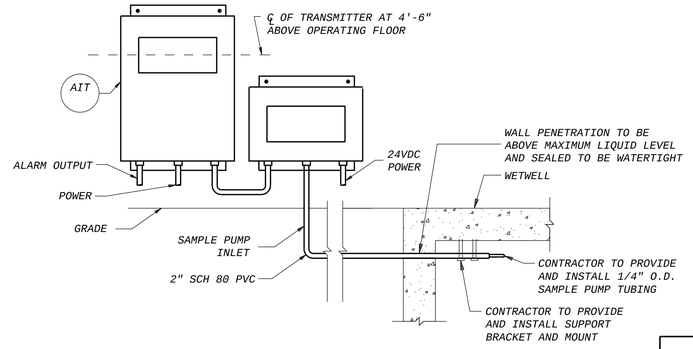

C COMBUSTIBLE GAS DETECTOR INSTALLATION DETAIL

I-501 NO SCALE

NOTES:
1. CONTRACTOR TO FIELD LOCATE CARRIER PIPE AND PENETRATION INTO WETWELL. ENGINEER TO APPROVE.
2. DISTANCE FROM SAMPLE POINT TO SAMPLE PUMP SHALL NOT EXCEED MANUFACTURER'S MAXIMUM DISTANCE.
3. DISTANCE FROM SAMPLE PUMP TO SENSOR/TRANSMITTER SHALL NOT EXCEED MANUFACTURER'S MAXIMUM DISTANCE.
4. DESIGN AND ORIENTATION OF COMBUSTIBLE GAS ANALYZER, TRANSMITTER, AND SAMPLING SYSTEM BASED ON SENSIDYNE PRODUCT. SEE SPECIFICATION 13564.

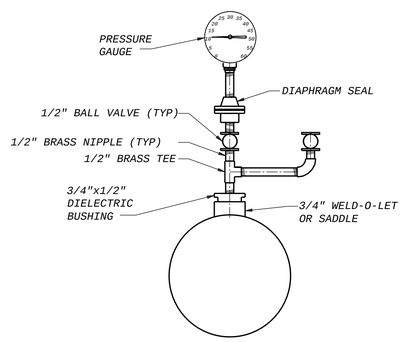

B PRESSURE GAUGE INSTALLATION DETAIL

I-501 NO SCALE

NOTES:
1. FIELD BOLT UNITS TO UNISTRUT FLOOR SUPPORT OR TO WALL, AS REQUIRED.

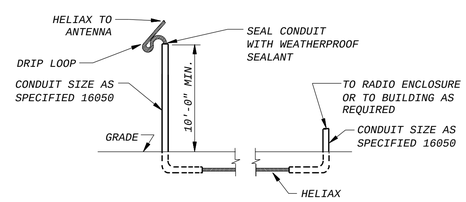

F HELIAX PROTECTION DIRECT-BURIED INSTALLATION DETAIL

I-501 NO SCALE

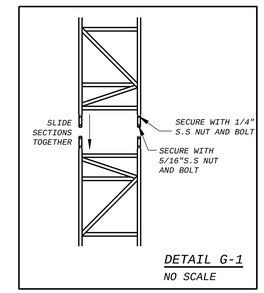

DETAIL G-1
NO SCALE

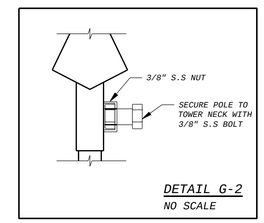

DETAIL G-2
NO SCALE

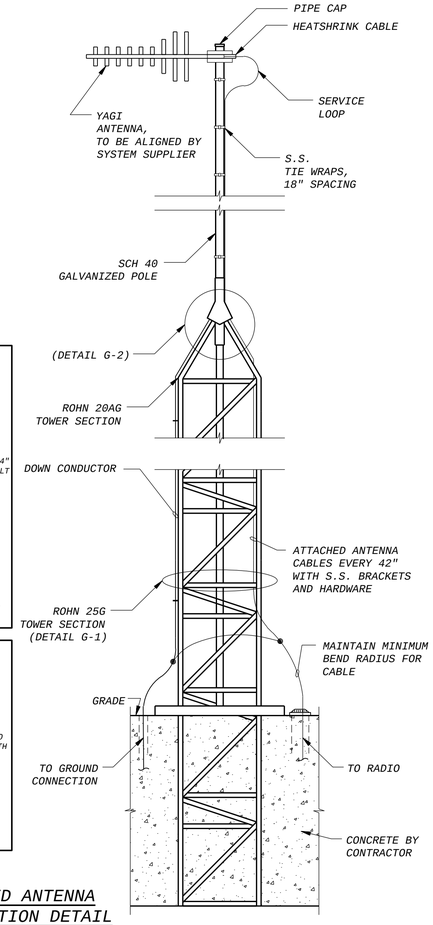

G TOWER MOUNTED ANTENNA MAST INSTALLATION DETAIL

I-501 NO SCALE

NOTES:
1. TOWER AND POLE SECTION HEIGHTS TO BE DETERMINED BY DATA FLOW SYSTEMS.
2. CONTRACTOR TO SIZE CONCRETE FOUNDATION BASED ON SPECIFIED BUILDING CODE REQUIREMENTS. SEE SPECIFICATION 13540.
3. REFER TO INSTALLATION DETAIL 'F' FOR HELIAX CABLE MANAGEMENT AT GRADE INTERFACE.

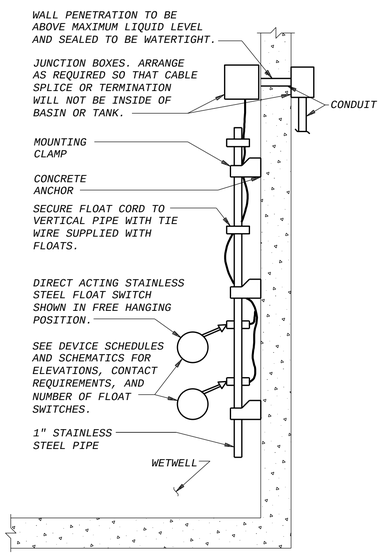

D FIXED MOUNT FLOAT SWITCH INSTALLATION DETAIL

I-501 NO SCALE

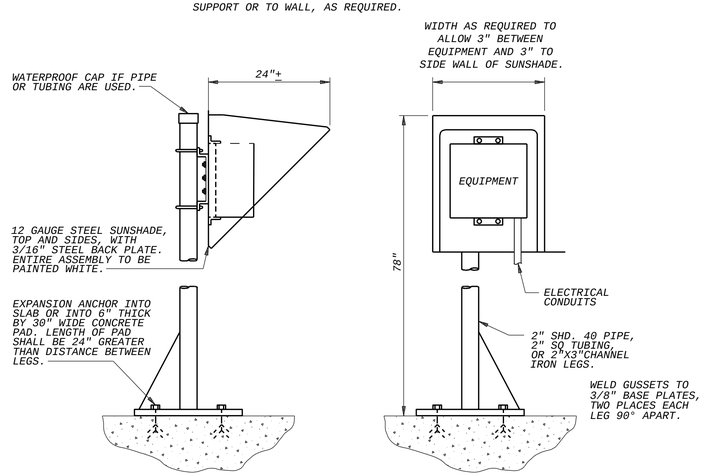

SIDE VIEW

FRONT VIEW

E OUTDOOR EQUIPMENT MOUNTING DETAIL

I-501 NO SCALE

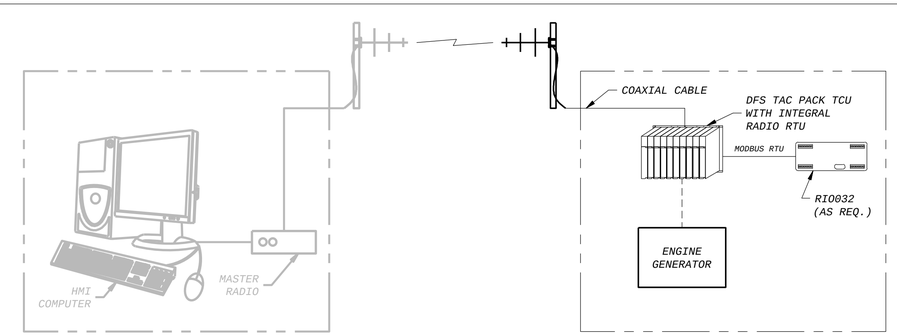

EXISTING SUPERVISORY COMPUTER SYSTEM CENTRAL TELEMETRY UNIT (CTU) AT THE EXISTING KEY WEST RICHARD A. HEYMAN ENVIRONMENTAL PROTECTION FACILITY

NEW REMOTE TELEMETRY UNIT (RTU) AT THE NEW DENNIS STREET STORMWATER PUMP STATION

PARTIAL CONTROL SYSTEM BLOCK DIAGRAM

ISSUED FOR CONSTRUCTION

DATE	REVISIONS AND RECORD OF USE	NO.	BY	CHK	APP

LAWRENCE BROUILLETTE LICENSE NO.57973 STATE OF FLORIDA PROFESSIONAL ENGINEER

Date:
Engineer of Record: LAWRENCE BROUILLETTE
Florida License No.: No. 57973

BLACK & VEATCH

Black & Veatch Corporation
2855 N. University Drive, Suite 210
Coral Springs, FL 33065 Certificate No. 8132

CITY OF KEY WEST
DENNIS STREET STORMWATER PUMP STATION

INSTRUMENTATION INSTALLATION DETAILS

DESIGNED: BLB
DETAILED: MPR
CHECKED: LJB
APPROVED: LJB
DATE: MARCH 2019

0 1/2 1
IF THIS BAR DOES NOT MEASURE 1" THEN DRAWING IS NOT TO FULL SCALE

PROJECT NO. 193108

I-501
SHEET 39 OF 39

2016_AutoCAD_PID_Template_Imperial.dwg
RIG92800, 2/28/2019 2:54:24 PM
RIG92800, 2/28/2019 2:54:53 PM

FD9000
D9000