GENERAL NOTES AND SPECIFICATIONS

1.0 GENERAL ENGINEERING AND CONSTRUCTION
Design and construction shall be in compliance with the latest edition of the 5th Edition Florida Building Code (2014) and the specific requirements of the City of Key West, Florida.
1.1 General: Construction methods, procedures and sequences are the responsibility of the Contractor. The Contractor shall take the necessary means to maintain and protect the structural integrity and serviceability of the construction at all times.
1.2 Engineering Certification: The extent of the Engineering Certification of these drawings is limited to the construction of the pool deck as indicated.
1.3 Construction Loads: Structural members as shown in the working drawings have been designed to carry the code required service loads only. The structural design of this project has not considered loads imposed during construction. Construction loads may exceed the service design loads.
The Contractor shall be responsible for engaging the necessary construction engineering and design, determining and employing the methods necessary to support all loads during construction.
1.4 Construction Coordination: The Contractor shall coordinate all work required by the architectural, structural, working drawings and shall verify all dimensions, elevations and the location and sizes of all finishes and other project requirements not shown on the structural working drawings..
1.5 Conflicts: Whenever conflicts, discrepancies, or ambiguities exist in the structural drawings, schedules or notes, they shall be brought to the attention of the Engineer for correction and/or clarification.
1.6 Engineer's Limitation of Responsibility: The Engineer shall not be responsible for the quality of composition of materials, shop drawings fabrication, construction inspection, supervision, of review, special inspection, or the quality or correctness of construction. The Engineer shall not be responsible for site and construction safety and/or the safety of the workers. Site and construction safety is the responsibility of the Contractor.
1.7 Engineer's Statement of Compliance: To the best of the Engineer's information, knowledge, and belief the structural plans and specifications presented herein comply with the applicable minimum building codes, standards and practices.
1.8 Location: These plans are for the construction of the pool deck at the location so designated hereon.
1.9 Changes: There shall be no deviation from these plans without prior approval from the engineer of record. Any changes made prior to approval by the owner and/or engineer of record are disallowed as extras and the contractor may have to restore to conform to plans without additional compensation.
1.10 Discrepancies: The contractor shall check and verify all dimensions and conditions of the job site and report any discrepancies or conditions that are unsatisfactory or unsafe before proceeding with the work.
1.11 Safety: The Contractor shall provide for the safety, prevention of injury or loss at the job to all persons employed on the work, persons visiting the work and the general public. He shall also be responsible for the prevention of damage, due to the work, to materials or equipment and other property at the site of adjacent thereto.
1.12 Omissions: Omissions from the drawings or notes or the misdescription of details of work which are manifestly to carry out the intent of the drawings and notes, or which are customarily performed, shall not relieve the contractor from performing such omitted or misdescribed details of work, but they shall be performed as if fully and correctly set forth and described in the drawings and notes.
1.13 Dimensions: The contractor shall not scale drawings. Any information that he cannot obtain from dimensions, detail or schedule, he shall notify the engineer of record.
1.14 Coordination: The Contractor shall check and coordinate work of various trades to prevent any conflicts.
1.15 Concrete: Concrete work shall conform to all requirements of "ACI 301", latest edition, "Specifications for Structural Concrete for Buildings".
1.16 Reinforcing: Reinforcing steel shall be Grade 60.
1.17 Drainage Calculation: All storm water shall be retained on the property.
1.18 Completion: After completion of construction remove all debris and construction equipment.

DESIGN INFORMATION
5th EDITION FLORIDA BUILDING CODE (2014)

USE GROUP	R – 3 RESIDENTIAL
CONSTRUCTION	TYPE III
ZONING	SINGLE FAMILY
DECKING	100 PSF
CATEGORY	C
INT. PRESSURE COEFFICIENT	- 0.18
SEISMIC GROUP	0
FLOOD ZONE	AE 7
ULTIMATE WIND ZONE	180 MPH
NOMINAL WIND SPEED	139.4 MPH

THE CONSTRUCTION DEPICTED ON THESE DRAWINGS WAS DESIGNED TO COMPLY WITH ALL APPLICABLE CITY AND STATE CODES AND ORDINANCES, INCLUDING THE 5TH EDITION FLORIDA BUILDING CODE (2014) AND THE LATEST EDITIONS OF THE FIRE CODE AND LIFE SAFETY CODE.

STORMWATER RETENTION
THIS CONSTRUCTION WILL NOT RESULT IN ADDITIONAL STORMWATER AT THIS LOCATION

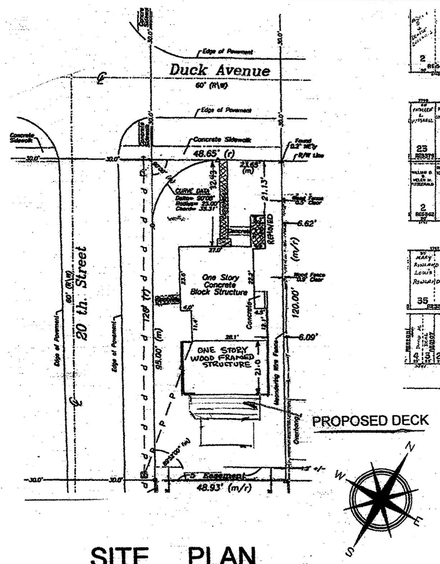

SITE PLAN
SCALE: 1" = 40'

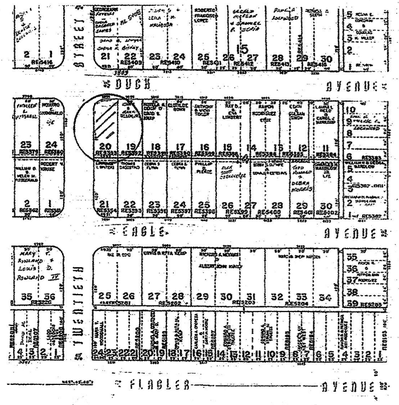

LOCATION PLAN

PLANS REVIEWED BY BUILDING
I HEREBY AGREE TO COMPLY WITH ALL ORDINANCES OF THE CITY OF KEY WEST AND ALL FEDERAL, STATE AND MONROE COUNTY LAWS WHETHER SHOWN ON THIS PLAN OR NOT.
OWNER/AGENT

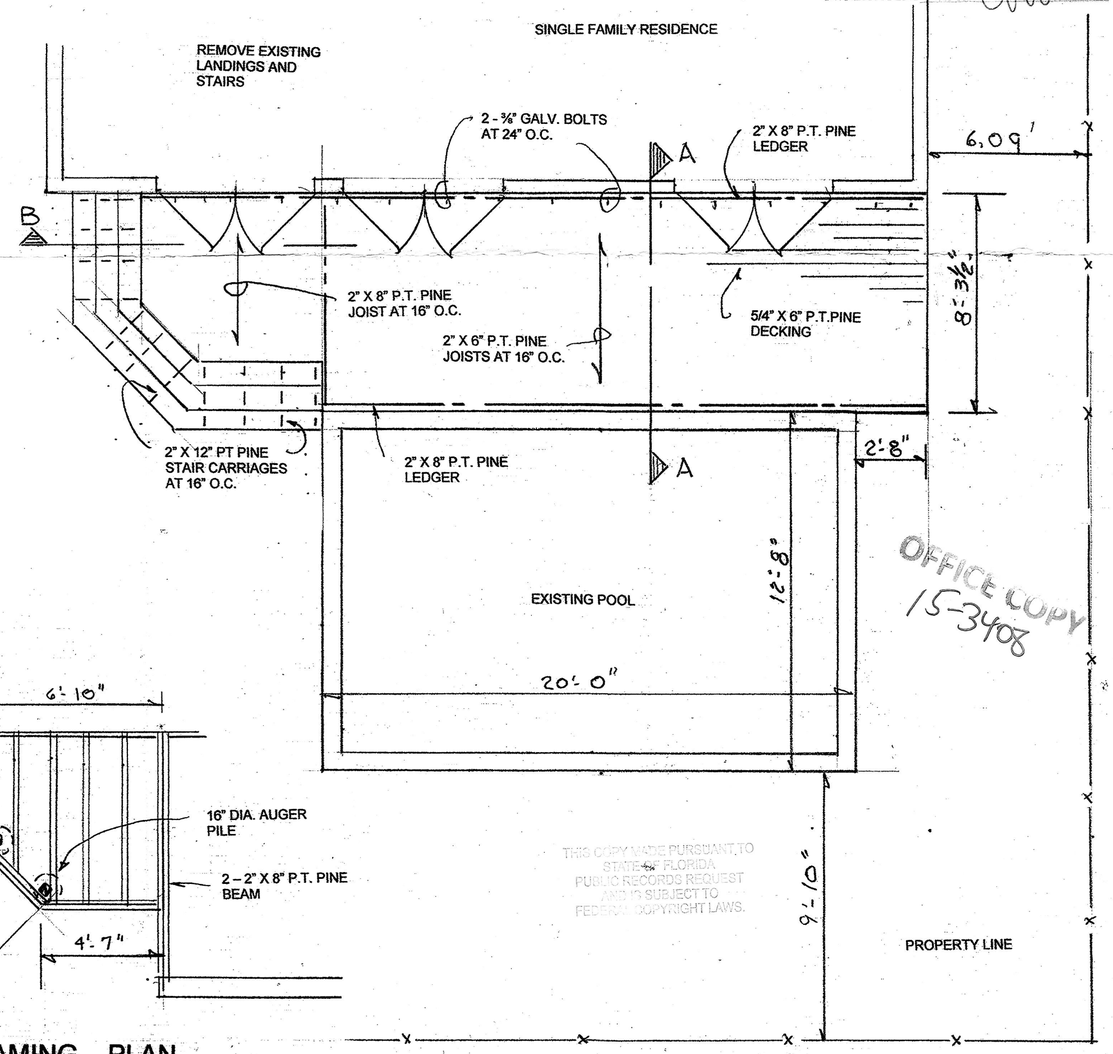

PLAN OF DECK
SCALE: ¼" = 1' 0"

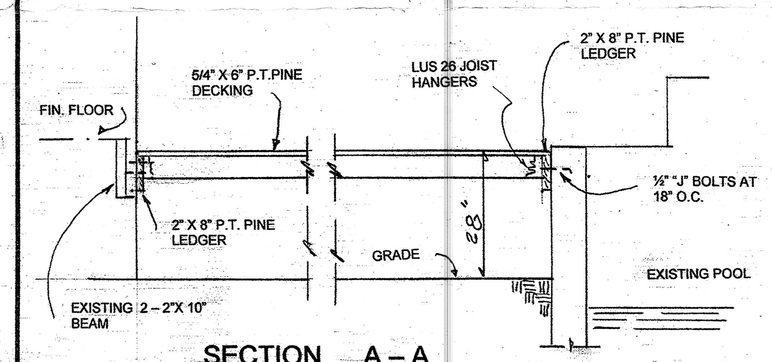

SECTION A – A
SCALE: ½" = 1' 0"

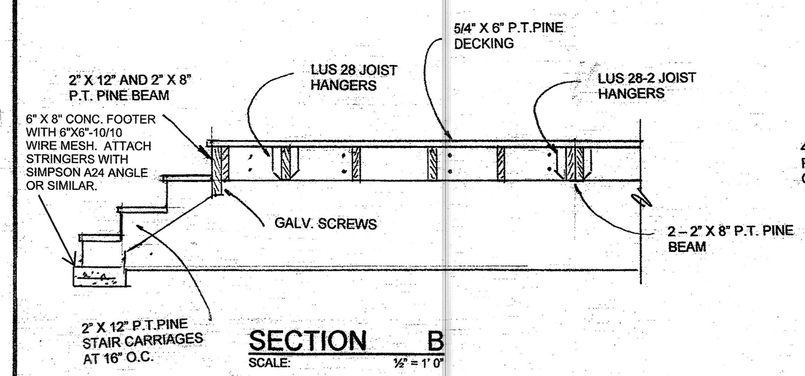

SECTION B
SCALE: ½" = 1' 0"

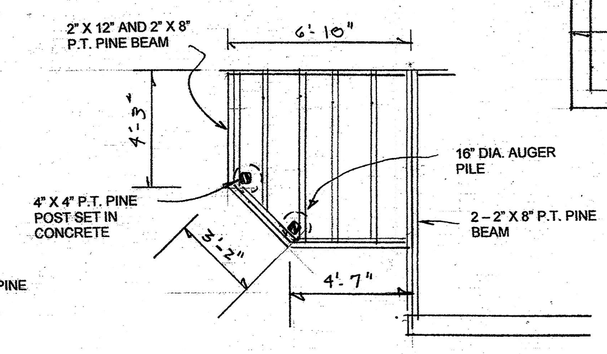

FRAMING PLAN
SCALE: ¼" = 1' 0"

OFFICE COPY
15-3408

THIS COPY MADE PURSUANT TO STATE OF FLORIDA PUBLIC RECORDS REQUEST AND IS SUBJECT TO FEDERAL COPYRIGHT LAWS.

REVISIONS	BY

REYNOLDS ENGINEERING SERVICES
22330 Laffite Drive,
Cudjoe Key, Florida 33042
Phone 305 394-5987
jim@reynoldsengineeringservices.com
Date:
James C. Reynolds, P. E. #46686

POOL DECK
3800 DUCK AVENUE
KEY WEST, FLORIDA

Date 9/14/15
Scale AS SHOWN
Drawn JE
Job
Sheet 1
Of 1 Sheets

18 X 24 PRINTED ON NO. 1000H CLEARPRINT