TECHNICAL SPECIFICATIONS FOR RICHARD A. HEYMAN ENVIRONMENTAL PROTECTION FACILITY – DEEP WELL INJECTION PUMP AND HVAC CITY OF KEY WEST PROJECT ID#: 199322

December 2019

Black & Veatch
2855 North University Drive, Suite 210
Coral Spring, FL 33065

LUCAS BOTERO
LICENSE
No 67242
STATE OF
FLORIDA
PROFESSIONAL ENGINEER

This item has been digitally signed and sealed by Lucas Botero, PE on the date adjacent to the seal using a Digital Signature.

Printed Copies of this document are not considered signed and sealed and the SHA authentication code must be verified on any electronic copies.

Date: 2020.01.02 23:20:03-05'00'

Lucas Botero, P.E.

Date: _____

Florida Registered Professional Engineer No. 67242

Specifications: Division 1, 2, 9, 11, 15 (15010, 15020, 15061, 15093, 15101, 15130, 15140, 15180, 15250)

Civil and Process Mechanical

Section 01015

PROJECT REQUIREMENTS

1. GENERAL DESCRIPTION OF WORK. The Work of installing a new deep well injection pump and HVAC system to cool the existing electrical room and the associated supporting infrastructure to be performed under these Contract Documents shall consist of furnishing and installation of all tools, equipment, materials, supplies, manufactured articles, transportation and services, including fuel, power, water, and essential communications, for the performance of all labor, work, and/or other operations as required for the fulfillment of the Contract in strict conformance with the Contract Documents. The Work shall be complete, and all work, materials, and services not expressly shown or called for in the Contract Documents which may be necessary for the complete and proper construction of the Work in good faith shall be performed, furnished, and installed by the Contractor as though originally so specified or shown, at no increase in cost to the Owner.

The Work shall be performed at the Richard A. Heyman Environmental Protection Facility (RAHEPF) on Fleming Key.

The Work to be performed under these Contract Documents is generally described as follows:

A. Installation of new Wilo effluent pump and associated VFD (to be provided by Owner) for deep well injection including piping and valves associated.
B. Installation of HVAC system to cool electrical room.

All work shall be in compliance with all applicable federal, state and local laws and regulations, including those for materials that contain lead. All work shall meet Occupational Safety & Health Administration (OSHA) compliance.

2. COORDINATION. Contractor shall plan, schedule, and coordinate its operations in a manner which will facilitate the simultaneous progress of the Work. Contractor shall develop a plan for diverting flow as necessary to facilitate the installation of the deep well injection pump and associated appurtances. The diversion plan shall be submitted and approved by Owner prior to commencement of Work.

3. WORK BY PUBLIC UTILITIES. Not used.

4. QUALITY CONTROL. The Contractor shall develop and maintain a program, acceptable to Owner and Engineer, to ensure that all work required under this Contract strictly conforms to all requirements of the Contract Documents. The Contractor shall be responsible for and shall supervise the work of all

subcontractors, providing instructions to each when their work does not conform to the requirements of the Quality Control Program and the Contract Documents.

5. WORK BY OWNER. Owner shall perform certain activities in connection with the Project with its own personnel as follows:

A. One (1) tree shall be removed and relocated by the Owner prior to the Contractor starting the Work associated with Item B, as described in the General Description of Work.

6. PROCUREMENT CONTRACTS. Not used.

7. ITEMS FURNISHED BY OWNER. The items of equipment and materials described in the following paragraphs shall be furnished by Owner for installation by Contractor.

Shop and installation drawings pertaining to the equipment and accessories will be furnished to Contractor upon completion of review by Engineer.

7.01. For Installation.

a. Wilo deep well injection pump and associated variable frequency drive (VFD).

8. RESPONSIBILITY FOR MATERIALS AND EQUIPMENT.

8.01. Items Furnished by Owner. Contractor's responsibility for materials and equipment furnished by Owner shall begin at the point of delivery on acceptance by Contractor. Contractor shall carefully examine each shipment prior to acceptance and shall reject all defective items. Owner reserves the right, however, to accept items rejected by Contractor and to authorize their installation in the Work.

Defective materials and equipment discovered after installation and prior to final acceptance of the Work, where the defect is of a nature not detectable by visual examination and other appropriate field inspection methods, shall be replaced by Owner, together with such additional materials and supplies as may be necessary for their replacement. Contractor shall furnish all necessary tools, equipment, and appliances, and perform all necessary labor, for the removal and replacement of such defective items in a manner acceptable to Engineer; adjustment to the Contract Price for the costs of the removal and replacement shall be made in accordance with Article 11 of the General Conditions.

All materials and equipment furnished by Owner which disappear or are damaged after their acceptance by Contractor shall be replaced by and at the expense of Contractor. Replacements shall conform to the original procurement specifications.

8.02. Items Furnished by Contractor. Contractor shall be fully responsible for all materials and equipment which it has furnished.

8.03. Delivery and Handling of Items Furnished by Owner. Equipment and materials furnished by Owner for installation by Contractor will be delivered f.o.b. cars or trucks to Richard A. Heyman Environmental Protection Facility.

Contractor shall be responsible for all unloading, reloading, transporting to the site, storage if necessary, rehandling, and installation.

All items shall be unloaded promptly after arrival. All charges for demurrage due to negligence or delay by Contractor shall be paid by Contractor. Equipment and materials shall be handled by methods which will prevent damage.

Equipment and materials shall be protected from exposure to the elements. All equipment shall be stored in accordance with the requirements of the Contract Documents.

Before being placed in operation, all equipment furnished by Owner and installed by Contractor will be inspected, checked, and adjusted by an experienced and competent technical representative of the equipment manufacturer. The technical representative will also place the equipment in initial operation under both trial and full load conditions and determine whether its operation is satisfactory and proper. This service is included as part of the equipment procurement contract and will be provided by Owner at no cost to Contractor, as set forth in the Quality Control section.

9. OFFSITE STORAGE. Offsite storage arrangements shall be approved by Owner for all materials and equipment not incorporated into the Work but included in Applications for Payment. Such offsite storage arrangements shall be presented in writing and shall afford adequate and satisfactory security and protection. Offsite storage facilities shall be accessible to Owner and Engineer.

10. SUBSTITUTES AND "OR-EQUAL" ITEMS. Provisions for evaluation of proposed "or-equal" items of materials or equipment are covered in Paragraph 7.04 of the General Conditions. Provisions for evaluation of proposed substitute items of materials or equipment are covered in Paragraph 7.05 of the General Conditions. Requests for review of equivalency will not be accepted by Engineer from anyone except Contractor, and such requests will not be considered until after the Effective Date of the Agreement.

Whenever the names of proprietary products or the names of particular manufacturers or vendors are used, it shall be understood that the words "or equal" following the enumeration, if not specifically stated, are implied.

11. PREPARATION FOR SHIPMENT. All materials shall be suitably packaged to facilitate handling and protect against damage during transit and storage. Painted surfaces shall be protected against impact, abrasion, discoloration, and other damage. All painted surfaces which are damaged prior to acceptance of equipment shall be repainted to the satisfaction of Engineer.

Each item, package, or bundle of material shall be tagged or marked as identified in the delivery schedule or on the Shop Drawings. Complete packing lists and bills of material shall be included with each shipment.

12. SALVAGE OF MATERIALS AND EQUIPMENT. Existing materials and equipment removed shall become Contractor's property.

Existing materials and equipment removed by Contractor shall not be reused in the Work, except where so specified or indicated.

13. OPERATION OF EXISTING FACILITIES. The existing facilities must be kept in continuous operation throughout the construction period. No interruption will be permitted which adversely affects the degree of service provided. Provided permission is obtained from Owner in advance, portions of the existing facilities may be taken out of service for short periods corresponding with periods of minimum service demands.

Contractor shall make temporary modifications as necessary to keep the existing facilities in operation during the construction period.

14. ACCESS TO PROJECT SITE. The project site is on a Naval base. The Contractor will be subject to the security requirements (security clearance, entrance, exit, badging, etc.) of the Naval base.

15. NOTICES TO OWNERS AND AUTHORITIES. Contractor shall, as provided in the General Conditions, notify owners of adjacent property and utilities when prosecution of the Work may affect them.

When it is necessary to temporarily deny access to property, or when any utility service connection must be interrupted, Contractor shall give notices sufficiently in advance to enable the affected persons to provide for their needs. Notices shall conform to any applicable local ordinance and, whether delivered orally or in writing, shall include appropriate information concerning the interruption and instructions on how to limit inconvenience caused thereby.

Utilities and other concerned agencies shall be notified at least 24 hours prior to cutting or closing streets or other traffic areas or excavating near underground utilities or pole lines.

16. LINES AND GRADES. Not used.

17. ALLOWANCES. The Contract Price includes allowances for all applicable permits.

18. CONNECTIONS TO EXISTING FACILITIES. Unless otherwise specified or indicated, Contractor shall make all necessary connections to existing facilities, including structures, drain lines, and utilities such as water, sewer, gas, telephone, and electric. In each case, Contractor shall receive permission from Owner or the owning utility prior to undertaking connections. Contractor shall protect facilities against deleterious substances and damage.

Connections to existing facilities which are in service shall be thoroughly planned in advance, and all required equipment, materials, and labor shall be on hand at the time of undertaking the connections. Work shall proceed continuously (around the clock) if necessary to complete connections in the minimum time. Operation of valves or other appurtenances on existing utilities, when required, shall be by or under the direct supervision of the owning utility.

19. UNFAVORABLE CONSTRUCTION CONDITIONS. During unfavorable weather, wet ground, or other unsuitable construction conditions, Contractor shall confine its operations to work which will not be affected adversely by such conditions. No portion of the Work shall be constructed under conditions which would affect adversely the quality or efficiency thereof, unless special means or precautions are taken by Contractor to perform the Work in a proper and satisfactory manner.

19.01 HURRICANE AND STORM WARNINGS. The Contractor shall take all precautions necessary to protect the job site during hurricane and storm watches and warnings.

20. DEMOLITION, CUTTING AND PATCHING. As provided in General Conditions, Contractor shall perform all cutting and patching required for the Work and as may be necessary in connection with uncovering Work for inspection or for the correction of defective Work.

Contractor shall perform all demolition, cutting and patching required for and in connection with the Work, including but not limited to the following:

Removal of existing structures.
Removal of improperly timed Work.
Removal of samples of installed materials for testing.
Installation of new Work in existing structures.

Contractor shall provide all shoring, bracing, supports, and protective devices necessary to safeguard all Work and existing facilities during cutting and patching operations. Contractor shall not undertake any cutting or demolition which may

affect the structural stability of the Work or existing structures without Engineer's concurrence.

Materials shall be demolished, cut and removed to the extent indicated on the Drawings or as required to complete the Work. Materials shall be removed in a careful manner, with no damage to adjacent structures or materials. Materials which are not salvable shall be removed from the site by Contractor.

All Work and existing structures affected by cutting and demolition operations shall be restored with new materials, or with salvaged materials acceptable to Engineer, to obtain a finished installation with the strength, appearance, and functional capacity required. If necessary, entire surfaces shall be patched and refinished.

21. SITE CONDITIONS. The Contractor acknowledges that it has satisfied itself as to the conditions affecting the Work, including but not restricted to those bearing upon transportation, disposal, handling and storage of materials, availability of labor, water, electric power, roads and uncertainties of weather, river stages, tides, water tables or similar physical conditions at the site, the conformation and conditions of the ground, the character of equipment and facilities needed preliminary to and during execution of the Work. The Contractor further acknowledges that it has satisfied itself as to the character, quality and quantity of surface and subsurface materials or obstacles to be encountered insofar as this information is reasonably ascertainable from information presented by the Drawings and Specifications made a part of this Contract, or any other information made available to it prior to receipt of Bids. Any failure by the Contractor to acquaint itself with the available information will not relieve the Contractor from responsibility for estimating properly the difficulty or cost of successfully performing the Work. The Owner assumes no responsibility for any conclusions or interpretations made by the Contractor on the basis of the information made available by the Owner.

22. HAZARDOUS ENVIRONMENTAL CONDITIONS AT SITE. No Hazardous Environmental Conditions at the Site in areas that will be affected by the Work are known to the Owner.

22.01. Abatement of Hazardous Environmental Conditions. If Contractor's survey of the Site indicates the presence of Hazardous Environmental Conditions, Contractor shall abate the Hazardous Environmental Conditions under a Change Order to the Contract. Before commencement of work that may impact, damage or disturb the Hazardous Environmental Conditions at the Site, Contractor shall engage a qualified Subcontractor to encapsulate, enclose, or remove and dispose of all identified ACM, Metal Bearing Protective Coatings, Paints, and Linings, Contaminated Environmental Media, and/or other Hazardous Substances in accordance with current regulations of the Environmental Protection Agency and the U. S. Department of Labor - Occupational Safety and

Health Administration, the applicable state regulating agency, and any local government agency.

22.02. Subcontractor's Qualifications. Subcontractor for removal/abatement of Hazardous Environmental Conditions shall be regularly engaged in this type of activity and shall be familiar with the regulations which govern this work. Subcontractor shall demonstrate to the satisfaction of Owner that it has successfully completed removal/abatement projects of similar nature and extent, that it has the necessary staff and equipment to perform the work, and that it has an approved site for disposal of waste materials. Liability insurance covering the Hazardous Environmental Condition removal/abatement work shall be provided as specified in the Supplementary Conditions.

22.03. Removal/Abatement Methods. The Hazardous Environmental Condition removal/abatement Subcontractor shall visit the site of the Work to determine the equipment required for completion of the work, and shall submit a work plan of its proposed removal/abatement procedure to Owner before beginning work and shall certify that the methods are in full compliance with the governing regulations. The work plan shall cover all aspects of the removal/abatement, including health and safety of construction site and owner employees, hygiene facilities, employee certification, clearance criteria, transportation and disposal, enclosure techniques, and other techniques appropriate for the proposed work.

For abatement of ACM, Contractor shall retain an independent third party air monitoring firm to conduct air monitoring as required to demonstrate the effectiveness of the dust containment system. The air quality testing firm shall submit a report documenting the results of the air monitoring. The air monitoring firm shall have at least 5 years of experience in air monitoring for ACM removal.

23. CLEANING UP. Contractor shall keep the premises free at all times from accumulations of waste materials and rubbish. Contractor shall provide adequate trash receptacles about the Site and shall promptly empty the containers when filled.

Construction materials, such as concrete forms and scaffolding, shall be neatly stacked by Contractor when not in use. Contractor shall promptly remove splattered concrete, asphalt, oil, paint, corrosive liquids, and cleaning solutions from surfaces to prevent marring or other damage.

Volatile wastes shall be properly stored in covered metal containers and removed daily.

Wastes shall not be buried or burned on the Site or disposed of into storm drains, sanitary sewers, streams, or waterways. All wastes shall be removed from the Site and disposed of in a manner complying with local ordinances and antipollution laws.

Adequate cleanup will be a condition for recommendation of progress payment applications.

24. APPLICABLE CODES. References in the Contract Documents to local codes mean the following:

a. National Electrical Code (NEC-NFPA 70)
b. Florida Energy Code
c. Florida Building Code (FBC), 6th Edition (2017)
d. International Fire Code (IFC), Florida Fire Prevention Code, and NFPA 820
e. Florida Mechanical Code (FMC), 2017
f. Applicable local ordinances for Key West.

Other standard codes which apply to the Work are designated in the Specifications.

25. REFERENCE STANDARDS. Reference to standards, specifications, manuals, or codes of any technical society, organization, or association, or to the laws or regulations of any governmental authority, whether such reference be specific or by implication, shall mean the latest standard specification, manual, code, or laws or regulations in effect at the time of opening of Bids (or on the effective date of the Contract or Agreement if there were no Bids), except as may be otherwise specifically stated in the Contract Documents. However, no provision of any referenced standard, specification, manual, or code, or any instruction of a Supplier, shall be effective to change the duties or responsibilities of Owner, Contractor, or Engineer, or any of their subcontractor, consultants, agents, or employees from those set forth in the Contract Documents, nor shall any such provision or instruction be effective to assign to Owner, Engineer, or any of Engineer's Consultants, agents, or employees, any duty or authority to supervise or direct the performance of the Work or any duty or authority to undertake responsibility inconsistent with the provisions of the Contract Documents.

26. BID ALTERNATIVES. Not used.

27. PRECONSTRUCTION CONFERENCE. Prior to the commencement of Work at the Site, a preconstruction conference will be held at a mutually agreed time and place. The conference shall be attended by:

a. Contractor and its superintendent.
b. Principal Subcontractors.
c. Representatives of principal Suppliers and manufacturers as appropriate.
d. Engineer and its Resident Project Representative.
e. Representatives of Owner.

f. Government representatives as appropriate.
g. Others as requested by Contractor, Owner, or Engineer.

Unless previously submitted to Engineer, Contractor shall bring to the conference a preliminary schedule for each of the following:

a. Progress Schedule.
b. Procurement schedule.
c. Schedule of Values for progress payment purposes.
d. Schedule of Shop Drawings and other submittals.

The purpose of the conference is to designate responsible personnel and establish a working relationship. Matters requiring coordination will be discussed and procedures for handling such matters established. The agenda will include:

a. Contractor 's preliminary schedules.
b. Transmittal, review, and distribution of Contractor 's submittals.
c. Processing Applications for Payment.
d. Maintaining record documents.
e. Critical Work sequencing.
f. Field decisions and Change Orders.
g. Use of premises, office and storage areas, security, housekeeping, and Owner's needs.
h. Major equipment deliveries and priorities.
i. Contractor 's assignments for safety and first aid.

Engineer will preside at the conference and will arrange for keeping the minutes and distributing the minutes to all persons in attendance.

28. PROGRESS MEETINGS. Contractor shall schedule and hold regular progress meetings at least monthly and at other times as requested by Engineer or required by progress of the Work. Contractor, Engineer, and all Subcontractors active on the Site shall be represented at each meeting. Contractor may at its discretion request attendance by representatives of its Suppliers, manufacturers, and other Subcontractors.

Contractor shall preside at the meetings. Meeting minutes shall be prepared and distributed by Contractor. The purpose of the meetings will be to review the progress of the Work, maintain coordination of efforts, discuss changes in scheduling, and resolve other problems which may develop.

29. SITE ADMINISTRATION. Contractor shall be responsible for all areas of the Site used by it, and by all Subcontractors in the performance of the Work. Contractor shall exert full control over the actions of all employees and other persons with respect to the use and preservation of property and existing facilities, except such controls as may be specifically reserved to Owner or

others. Contractor shall have the right to exclude from the Site all persons who have no purpose related to the Work or its inspection, and may require all persons on the Site (except Owner's employees) to observe the same regulations as Contractor requires of its employees.

30. USE OF PREMISES. Contractor shall limit site disturbance within the area identified on the Drawings.

31. NONSMOKING BUILDING. Not used.

End of Section

Section 01025

PROGRESS PAYMENT PROCEDURES

1. SCOPE. This section covers methods of measurement and payment for items of Work under this Contract.

2. GENERAL. The Contract Price for each section of the Contract shall cover all Work required by the Contract Documents. All costs in connection with the proper and successful completion of the Work, including furnishing all materials, equipment, supplies, and appurtenances; providing all construction plant, equipment, and tools; and performing all necessary labor and supervision to fully complete the Work, shall be included in the unit and lump sum prices bid. All Work not specifically set forth as a pay item in the Bid Form shall be considered a subsidiary obligation of Contractor and all costs in connection therewith shall be included in the prices bid.

3. ESTIMATED QUANTITIES. All estimated quantities stipulated in the Bid Form or other Contract Documents are approximate and are to be used only (a) as a basis for estimating the probable cost of the Work and (b) for the purpose of comparing the Bids submitted for the Work. The actual amounts of work done and materials furnished under unit price items may differ from the estimated quantities. The basis of payment for work and materials will be the actual amount of work done and materials furnished. Contractor agrees that it will make no claim for damages, anticipated profits, or otherwise on account of any difference between the amounts of work actually performed and materials actually furnished and the estimated amounts therefor.

4. EXCAVATION. Except where otherwise specified, the unit or lump sum price bid for each item of Work which involves excavation or trenching shall include all costs for such Work. No separate payment shall be made for excavation or trenching. All excavation work required for structures shall be unclassified as to materials which may be encountered; such excavation work shall be considered to be a subsidiary obligation of Contractor and the cost of such excavation shall be included in the prices bid for the structures.

4.01. Resodding. No separate payment shall be made in connection with resodding as specified or required. All costs in connection with resodding shall be included in the cost of trenching.

End of Section

Section 01070

ABBREVIATIONS AND ACRONYMS

1. LIST OF ABBREVIATIONS. Abbreviations for standards and organizations used in the Contract Documents are defined as follows:

AA	Aluminum Association
AABC	Associated Air Balance Council
AAMA	Architectural Aluminum Manufacturers Association
AASHTO	American Association of State Highway and Transportation Officials
ABMA	American Bearing Manufacturers Association
ACI	American Concrete Institute
ACPA	American Concrete Pipe Association
AEIC	Association of Edison Illuminating Companies
AFBMA	Antifriction Bearing Manufacturers Association now recognized as the ABMA
AFPA	American Forest & Paper Association
AGA	American Gas Association
AGMA	American Gear Manufacturers Association
AHA	American Hardboard Association
AHRI	Air-Conditioning, Heating and Refrigeration Institute
AISC	American Institute of Steel Construction
AISI	American Iron and Steel Institute
AITC	American Institute of Timber Construction
AMCA	Air Movement and Control Association International
ANSI	American National Standards Institute
APA	Engineered Wood Association (formerly American Plywood Association)
API	American Petroleum Institute
AREMA	American Railway Engineers and Maintenance-of-Way Association
ASAHC	American Society of Architectural Hardware Consultants
ASCE	American Society of Civil Engineers
ASHRAE	American Society of Heating, Refrigerating, and Air-Conditioning Engineers
ASME	American Society of Mechanical Engineers
ASSE	American Society of Sanitary Engineers
ASTM	ASTM International
AWG	American Wire Gauge
AWI	Architectural Woodwork Institute
AWPA	American Wood-Preservers' Association
AWS	American Welding Society
AWWA	American Water Works Association

BHMA	Builders Hardware Manufacturers Association
BIA	Brick Institute of America (formerly SCPI)
CDA	Copper Development Association
CISPI	Cast Iron Soil Pipe Institute
CMAA	Crane Manufacturers Association of America
CRA	California Redwood Association
CRSI	Concrete Reinforcing Steel Institute
CS	Commercial Standard (U.S. Department of Commerce)
DHI	Door and Hardware Institute
DIPRA	Ductile Iron Pipe Research Association
EEI	Edison Electric Institute
EJCDC	Engineers' Joint Contract Documents Committee
EPA	Environmental Protection Agency
FCC	Federal Communications Commission
FCI	Fluid Controls Institute
Fed Spec	Federal Specification
FGMA	Flat Glass Marketing Association
FHWA	Federal Highway Administration
FIA	Factory Insurance Association
FM	Factory Mutual
FSA	Fluid Sealing Association
HEI	Heat Exchange Institute
HMI	Hoist Manufacturers Institute
HPMA	Hardwood Plywood Manufacturers Association
HTI	Hand Tools Institute
I-B-R	Institute of Boiler and Radiator Manufacturers
IEEE	Institute of Electrical and Electronics Engineers
IBC	International Building Code
IES	Illuminating Engineering Society
IFI	Industrial Fasteners Institute
IPCEA	Insulated Power Cable Engineers Association
IRI	Industrial Risk Insurers
ISA	International Society of Automation
LEED	Leadership in Energy and Environmental Design
MHI	Materials Handling Institute
MIL	Military Specification
MMA	Monorail Manufacturers Association

MSS	Manufacturers Standardization Society of Valve and Fitting Industry
NAAMM	National Association of Architectural Metals Manufacturers
NACE	NACE International
NBBPVI	National Board of Boiler and Pressure Vessel Inspectors
NBS	See NIST
NCSPA	National Corrugated Steel Pipe Association
NEBB	National Environmental Balancing Bureau
NEC	National Electrical Code
NECA	National Electrical Contractors Association
NEII	National Elevator Industry, Inc.
NEMA	National Electrical Manufacturers Association
NFPA	National Fire Protection Association
NIST	National Institute of Standards and Technology (formerly NBS)
NLA	National Lime Association
NPC	National Plumbing Code
NPT	National Pipe Thread
NRMCA	National Ready Mixed Concrete Association
NSC	National Safety Council
NSF	NSF International (formerly National Sanitation Foundation)
NTMA	National Terrazzo and Mosaic Association
NWMA	National Woodwork Manufacturers Association
OSHA	Occupational Safety and Health Administration
PCA	Portland Cement Association
PCI	Precast/Prestressed Concrete Institute
PS	Product Standard
RIS	Redwood Inspection Service
SAE	SAE International
SDI	Steel Door Institute
SFPA	Southern Forest Products Association
SI	Systéme International des Unités (International System of Units)
SIGMA	Sealed Insulating Glass Manufacturers Association
SJI	Steel Joist Institute
SMA	Screen Manufacturers Association
SMACNA	Sheet Metal and Air Conditioning Contractors National Association
SPFA	Steel Plate Fabricators Association
SPI	Society of the Plastics Industry

SPTA	Southern Pressure Treaters Association
SSFI	Scaffolding, Shoring & Forming Institute, Inc
SSPC	SSPC: The Society for Protective Coatings
TABB	Testing, Adjusting, and Balancing Bureau
UL	Underwriters' Laboratories
USBR	U.S. Bureau of Reclamation
USGBC	U.S. Green Building Council
WEF	Water Environment Federation

End of Section

Section 01300

SUBMITTAL PROCEDURES

1. SHOP DRAWINGS AND ENGINEERING DATA.

1.01. General. Shop Drawings and engineering data (submittals) covering all equipment and all fabricated components and building materials which will become a permanent part of the Work under this Contract shall be submitted to Engineer for review, as required. Submittals shall verify compliance with the Contract Documents, and shall include drawings and descriptive information in sufficient detail to show the kind, size, arrangement, and the operation of component materials and devices; the external connections, anchorages, and supports required; the performance characteristics; and dimensions needed for installation and correlation with other materials and equipment.
Each submittal shall cover items from only one section of the specification unless the item consists of components from several sources. Contractor shall submit a complete initial submittal including all components. When an item consists of components from several sources, Contractor's initial submittal shall be complete including all components.

All submittals, regardless of origin, shall be approved by Contractor and clearly identified with the name and number of this Contract, Contractor's name, and references to applicable specification paragraphs and Contract Drawings. Each copy of all submittals, regardless of origin, shall be stamped or affixed with an approval statement of Contractor. Each submittal shall indicate the intended use of the item in the Work. When catalog pages are submitted, applicable items shall be clearly identified and inapplicable data crossed out. The current revision, issue number, and date shall be indicated on all drawings and other descriptive data.

Contractor shall be solely responsible for the completeness of each submittal. Contractor's stamp or affixed approval statement of a submittal, per Figure 1-01300, is a representation to Owner, and Engineer that Contractor accepts sole responsibility for determining and verifying all field measurements, quantities, dimensions, specified performance and design criteria, installation requirements, materials, catalog numbers, and similar information with respect thereto, and that Contractor has reviewed and coordinated each submittal with other Shop Drawings and with the requirements of the Work and the Contract Documents.

All deviations from the requirements of the Contract Documents shall be identified as deviations on each submittal and shall be tabulated in Contractor's letter of transmittal using Figure 2-01300. Such submittals shall, as pertinent to the deviation, indicate essential details of all changes proposed by Contractor (including modifications to other facilities that may be a result of the deviation) and all required piping and wiring diagrams.

Shop drawings shall show the principal dimensions, weight, structural and operating features, space required, clearances, type and/or brand of finish or shop coat, grease fittings, etc., depending on the subject of the Drawings.

When so specified, or if considered by the Engineer to be acceptable, the manufacturer's specifications, catalog data, descriptive matter, illustrations, etc. may be submitted for review in place of shop drawings. In such case, the requirements shall be as specified for shop drawings, insofar as applicable.

Contractor shall submit shop drawings electronically. Drawings and the necessary data shall be submitted electronically to Engineer as specified below. Submittal documents shall be in color to facilitate use of red line markups. All electronic files shall be in Portable Document Format (PDF). The PDF file(s) shall be fully indexed using the Table of Contents, searchable with thumbnails generated. PDF images must be at a readable resolution. For most documents, they should be scanned or generated at 300 dots per inch (dpi). Use of higher resolution is acceptable with Owner and Engineer approval. Optical Character Recognition (OCR) capture must be performed on these images so that text can be searched, selected and copied from the generated PDF file. The PDF documents shall have a bookmark created in the navigation frame for each major entry (“Section” or “Chapter”) in the Table of Contents. Thumbnails shall be generated for each page or graphic in the PDF file.

PDF document properties shall include the submittal number for the document title and Contractor’s name for the author.

Electronic submittal file sizes shall be limited to 10 MB. When multiple files are required for a submittal the least number of files possible shall be created.

1.02. Requirements. All shop drawings shall be submitted to the Engineer through the Contractor. The Contractor is responsible for obtaining shop drawings from its subcontractors and returning reviewed Drawings to them. All shop drawings shall be prepared on standard size, 24-inch by 36-inch sheets. All Drawings shall be clearly marked with the name of the project, Owner, Contractor, and building, equipment, or structure to which the drawing applies. Drawings shall be suitably numbered and stamped by the Contractor. Each submittal shall include a letter of transmittal giving a list of the items included in the submittal.

1.03. Product Data. Where manufacturer's publications in the form of catalogs, brochures, illustrations, or other data sheets are submitted in lieu of prepared shop drawings, such submission shall specifically indicate the particular item offered. Identification of such items and relative pertinent information shall be made with indelible ink. Submissions showing only general information will not be accepted

Product data shall include materials of construction, dimensions, performance characteristics, capacities, wiring diagrams, piping and controls, etc.

1.04. Warranties: When warranties are called for, a sample of the warranty shall be submitted with the shop drawings. The sample warranty shall be the same form that will be used for the actual warranty. Actual warranties shall be originals and notarized.

1.05. Work Prior to Review: No material or equipment shall be purchased, fabricated especially for this Contract, or delivered to the project site until the required shop drawings have been submitted, processed and marked either "FURNISH AS SUBMITTED" or "FURNISH AS CORRECTED". All materials and Work involved in the construction shall be as represented by said Drawings.

The Contractor shall not proceed with any portion of the Work (such as the construction of foundations) for which the design and details are dependent upon the design and details of equipment for which submittal review has not been completed.

1.06. Substitutions: Whenever a particular brand or make of material, equipment, or other item is specified, or is indicated on the Drawings, it is for the purpose of establishing a standard of quality, design, and type desired and to supplement the detailed specifications. Any other brand or make which is equivalent to that specified or indicated may be offered as a substitute subject to the following provisions:

a. The Contractor shall submit for each proposed substitution sufficient details, complete descriptive literature, and performance data together with samples of the materials, where feasible, to enable the Engineer to determine if the proposed substitution is equal, in all respects including, but not limited to, quality, performance, ease of maintenance, availability of spare parts, and experience record.

b. The Contractor shall submit certified tests, where applicable, by an independent laboratory attesting that the proposed substitution is equal.

c. A list of installations where the proposed substitution is equal. Such listing shall cover a minimum of the previous five years and will furnish project names and contact phone numbers.

d. Where the acceptance of a substitution requires redesign of any part of the Work, all such additional redesign and all new Drawings and details required therefore shall be at the Contractor’s expense.

e. In all cases the Engineer shall be the sole judge as to whether a proposed substitution is to be accepted. The Contractor shall abide by the Engineer's

decision when proposed substitute items are judged to be unacceptable and shall in such instances furnish the item as specified. No substitute items shall be used in the Work without written acceptance of the Engineer.

f. Any substitution submitted by Contractor must meet the form, fit, function and life cycle criteria of the item proposed to be replaced and there must be a net dollar savings including Engineer review fees and charges.

g. Acceptance of any proposed substitution shall in no way release the Contractor from any of the provisions of the Contract Documents. Acceptance shall not result in any increase in the Contract Price or Contract time.

h. Owner may require, at Contractor's expense, a special performance guarantee or other surety with respect to any substitute.

1.07. Complete Submittals. Each submittal shall be complete in all aspects incorporating all information and data required to evaluate the products' compliance with the Contract Documents. Partial or incomplete submissions shall be returned to the Contractor without review.

1.08. Engineer's Review of Submittals. Engineer's review of submittals covers only general conformity to the Drawings and Specifications, external connections, and dimensions that affect the layout; it does not indicate thorough review of all dimensions, quantities, and details of the material, equipment, device, or item covered. Engineer's review shall not relieve Contractor of sole responsibility for errors, omissions, or deviations in the drawings and data, nor of Contractor's sole responsibility for compliance with the Contract Documents.

Engineer's submittal review period shall be 15 consecutive calendar days and shall commence on the first calendar day following receipt of the submittal or resubmittal in Engineer's office.

When the drawings and data are returned with review status "NOT ACCEPTABLE" or "RETURNED FOR CORRECTION," the Contractor is required to resubmit the drawings and data in their entirety plus additional or corrected data specifically requested by the Engineer and responses to Engineer’s review comments.

When the drawings and data are returned with the review status “EXCEPTIONS NOTED, RESUBMITTAL REQUIRED”, the corrections shall be made as instructed by Engineer. The select corrected drawings and data as indicated by the Engineer shall be resubmitted, along with written responses to Engineer’s review comments. The Contractor is not required to resubmit the drawings and data in their entirety.

When the drawings and data are returned with review status "EXCEPTIONS NOTED", "NO EXCEPTIONS NOTED", or "RECORD COPY", no additional copies need be furnished unless specifically requested by Engineer.

1.09. Resubmittal of Shop Drawings and Data. Contractor shall accept full responsibility for the completeness of each resubmittal. Contractor shall verify that all corrected data and additional information previously requested by Engineer are provided on the resubmittal. Resubmittals shall be in an organized and consistent format.

When corrected copies are resubmitted, Contractor shall direct specific attention to all revisions in writing and shall list separately any revisions made other than those called for by Engineer on previous submittals. Requirements specified for initial submittals shall also apply to resubmittals. Resubmittals shall bear the number of the first submittal followed by a letter (A, B, etc.) or a unique identification that indicates the initial submittal and correct sequence of each resubmittal.

If more than one resubmittal is required because of failure of Contractor to provide all previously requested corrected data or additional information, Contractor shall reimburse Owner for the charges of Engineer for review of the additional resubmittals. This does not include initial submittal data such as shop tests and field tests that are submitted after initial submittal.

Resubmittals shall be made within 30 days of the date of the letter returning the material to be modified or corrected, unless within 14 days Contractor submits an acceptable request for an extension of the stipulated time period, listing the reasons the resubmittal cannot be completed within that time.

The need for more than one resubmittal, or any other delay in obtaining Engineer's review of submittals, will not entitle Contractor to extension of the Contract Times unless delay of the Work is the direct result of a change in the Work authorized by a Change Order or failure of Engineer to review and return any submittal to Contractor within the specified review period.

1.10. Product Samples. Contractor shall furnish for review all product samples as required by the Contract Documents or requested by the Engineer to determine compliance with the specifications.

Samples shall be of sufficient size or quantity to clearly illustrate the quality, type, range of color, finish or texture and shall be properly labeled to show complete project identification, the nature of the material, trade name of manufacturer and location of the Work where the material represented by the sample will be used.

Samples shall be checked by the Contractor for conformance to the Contract Documents before being submitted to the Engineer and shall bear the Contractor's

stamp certifying that they have been so checked. Transportation charges on samples submitted to the Engineer shall be prepaid by the Contractor.

Engineer's review will be for compliance with the Contract Documents, and its comments will be transmitted to the Contractor by regular mail, posted no later than 15 days after receipt.

Acceptable samples will establish the standards by which the completed Work will be judged.

1.11. Color Selection. Contractor shall submit samples of colors and finishes for all accepted products before Engineer will coordinate the selection of colors and finishes with Owner. Engineer will prepare a schedule of finishes that includes the colors and finishes selected for both manufactured products and for surfaces to be field painted or finished and will furnish this schedule to Contractor within 60 days after the date of acceptance of the last color or finish sample.

1.12. Record Drawings. The Contractor shall keep and maintain, at the job site, one record set of Drawings. On these, it shall mark all project conditions, locations, configurations, and any other changes or deviations which may vary from the details represented on the original Contract Drawings, including buried or concealed construction and utility features which are revealed during the course of construction. Special attention shall be given to recording the horizontal and vertical location of all buried utilities that differ from the locations indicated, or which were not indicated on the Drawings. Said record drawings shall be supplemented by detailed sketches as necessary or directed to indicate, fully, the Work as actually constructed. These master record drawings of the Contractor's representation of as- built conditions, including all revisions made necessary by addenda and change orders shall be maintained up-to-date during the progress of the Work.

At a minimum the record drawings shall be reviewed on the 20th working day of every third month after the month in which the final Notice-to-Proceed is given as well as on completion of Work. Failure to maintain the record drawings up-to-date shall be grounds of withholding monthly progress payments until such time as the record drawings are brought up-to-date.

Record drawings shall be accessible to the Engineer at all times during the construction period.

Final payment will not be acted upon until the Contractor-prepared record drawings have been delivered to the Engineer. Said up-to-date record drawings shall be in the form of a set of prints with carefully plotted information overlaid in pencil.

Upon substantial completion of the Work and prior to final acceptance, the Contractor shall finalize and deliver a complete set of record drawings to the

Engineer for transmittal to the Owner, conforming to the construction records of the Contractor. This set of drawings shall consist of corrected drawings showing the reported location of the Work. The information submitted by the Contractor and incorporated in the Record Drawings will be assumed to be correct, and the Engineer will not be responsible for the accuracy of such information, and for any errors or omissions which may appear on the Record Drawings as a result.

2. OPERATION AND MAINTENANCE DATA AND MANUALS.

2.01. Preliminary Operation and Maintenance Manuals. Preliminary electronic copies of each operation and maintenance (O&M) manual shall be submitted to the Engineer prior to the date of shipment of the equipment, but only after shop drawings for the same equipment have been accepted by the Engineer.

Each preliminary O&M manual shall cover items from only one section of the specification unless the item consists of components from several sources.

The Contractor shall submit preliminary O&M manuals to Engineer in electronic copy. Submittals made by any other method shall not be acceptable. Engineer will not accept preliminary O&M manuals from anyone but Contractor. Preliminary O&M manuals shall be consecutively numbered in direct sequence of submittal and without division by subcontracts or trades.

Engineer's preliminary O&M manual review period shall be 15 consecutive calendar days and shall commence on the first calendar day following receipt of the preliminary O&M manual in Engineer's office.

When the O&M manuals are returned with the review status "RETURNED FOR CORRECTION", the corrections shall be made as instructed by the Engineer and the O&M manuals resubmitted as follows.

2.02. Corrected Operation and Maintenance Manuals. Corrected copies of each operation and maintenance (O&M) manual with corrections and additions made as instructed by the Engineer in the preliminary O&M manual review period shall be submitted to the Engineer not later than 30 days after placing the equipment in operation.

The Contractor shall submit corrected O&M manuals to Engineer in electronic copy according to the methods described in Paragraph 1.02. Submittals made by any other method shall not be acceptable. Engineer will not accept preliminary O&M manuals from anyone but Contractor. Preliminary O&M manuals shall be consecutively numbered in direct sequence of submittal and without division by subcontracts or trades.

All material shall be marked with project identification, and inapplicable information shall be marked out or deleted.

Engineer's review period for the corrected O&M manual shall be 28 consecutive calendar days and shall commence on the first calendar day following receipt of the submittal or resubmittal in Engineer's office.

When the O&M manuals are returned with review status "NOT ACCEPTABLE" or "RETURNED FOR CORRECTION", the Contractor is required to resubmit the O&M manuals in their entirety plus additional or corrected data specifically requested by the Engineer and written responses to Engineer's review comments.

When the O&M manuals are returned with the review status "EXCEPTIONS NOTED, RESUBMITTAL REQUIRED", the corrections shall be made as instructed by Engineer. The select corrected drawings and data as indicated by the Engineer shall be submitted, along with written responses to Engineer's review comments. The Contractor is not required to resubmit the drawings and data in their entirety.

When the O&M manuals are returned with review status "EXCEPTIONS NOTED", "NO EXCEPTIONS NOTED", or "RECORD COPY", no additional copies need be furnished unless specifically requested by Engineer.

Shipment of equipment will not be considered complete until all required manuals and data have been received.

Parts lists and operating and maintenance instructions shall be furnished for other equipment not listed in the individual equipment sections or the equipment schedule.

Operation and maintenance manuals shall include the following:

a. Equipment function, normal operating characteristics, and limiting conditions.
b. Assembly, installation, alignment, adjustment, and checking instructions.
c. Operating instructions for startup, routine and normal operation, regulation and control, shutdown, and emergency conditions.
d. Lubrication and maintenance instructions.
e. Guide to troubleshooting.
f. Parts lists and predicted life of parts subject to wear.
g. Outline, cross section, and assembly drawings; engineering data; and wiring diagrams.
h. Test data and performance curves, where applicable.

The operation and maintenance manuals shall be in addition to any instructions or parts lists packed with or attached to the equipment when delivered, or which may be required by Contractor.

After review by Engineer is complete three hard copies and one electronic copy of each operation and maintenance manual shall be prepared and delivered to Owner not later than 30 days prior to placing the equipment in operation. Procedures for submission of the electronic copy will be provided after award of the Contract. When review of the electronic copy by Engineer is complete, three copies of each electronic O&M manual shall be delivered on flash drive to Engineer. Each flash drive shall contain only one copy of one manual.

All material shall be marked with Project identification, and inapplicable information shall be marked out or deleted.

Shipment of equipment will not be considered complete until all required manuals and data have been received.

2.03. Hard Copy Operation and Maintenance Manuals. Hard copies submitted shall be temporarily bound in heavy paper covers bearing suitable identification. All manuals and other data shall be printed on heavy, first quality 8-1/2 x 11 inch paper, with standard three-hole punching. Drawings and diagrams shall be reduced to 8-1/2 x 11 inches or 11 x 17 inches. Where reduction is not practicable, larger drawings shall be folded separately and placed in envelopes, which are bound into the manuals. Each envelope shall be suitably identified on the outside. Each volume containing data for three or more items of equipment shall include a table of contents and index tabs. The final hard copy of each manual shall be prepared and delivered in substantial, permanent, three-ring or three-post binders with a table of contents and suitable index tabs.

2.04. Electronic Operation and Maintenance Manuals. Electronic manuals shall be in Portable Document Format (PDF), and shall be prepared at a resolution between 300 and 600 dots per inch (dpi), depending on document type. Optical Character Recognition (OCR) capture shall be performed on these documents. OCR settings shall be performed with the “original image with hidden text” option in Adobe Acrobat Exchange.

When multiple files are required the least number of files possible shall be created. File names shall be in the format OMXXXXX-YYYZ.pdf, where XXXXX is the five digit number corresponding to the specification section, YYY is a three digit O&M manual number, e.g. 001, and Z is the letter signifying a resubmittal, A, B, C, etc.

Documents prepared in PDF format shall be processed as follows:

1. Pages shall be searchable (processed for optical character recognition) and indexed when multiple files are required.

2. Pages shall be rotated for viewing in proper orientation.

3. A bookmark shall be provided in the navigation frame for each entry in the Table of Contents.

4. Embedded thumbnails shall be generated for each completed PDF file.

5. The opening view for PDF files shall be as follows:

   Initial View: Bookmarks and Page

   Page Number: Title Page (usually Page 1)

   Magnification: Set to Fit in Window

   Page: Single Page

6. Where the bookmark structure is longer than one page the bookmarks shall be collapsed to show the chapter headings only.

7. When multiple files are required the first file of the series (the parent file) shall list every major topic in the Table of Contents. The parent file shall also include minor headings bookmarked based on the Table of Contents. Major headings, whose content is contained in subsequent files (children) shall be linked to be called from the parent to the specific location in the child file. The child file shall contain bookmark entries for both major and minor headings contained in the child file. The first bookmark of any child file shall link back to the parent file and shall read as follows "Return to the *Equipment Name* Table of Contents", e.g. Return to the Polymer Feed System Table of Contents.

8. Drawings shall be bookmarked individually.

9. Files shall be delivered without security settings to permit editing, insertion and deletion of material to update the manual provided by the manufacturer.

2.05. Labeling. As a minimum, the following information shall be included on all final O&M manual materials, including flash drives, jewel cases, and hard copy manuals:

Equipment name and/or O&M title spelled out in complete words.
Project Name.

Owner Project/Contract Number.
Specification Section Number. Example: “Section 15500”
Manufacturer’s name.
File Name and Date.

For example:

Backwash Pump Operation and Maintenance Manual
Somewhere Plant Expansion
Project/Contract No. ____
Specification Section 11110
Manufacturer
OM11110-001.pdf, 5/05/07

End of Section

SUBMITTAL No. _____
SECTION _____
Do not combine multiple sections together
unless required by specifications.

(Contractor's Letterhead)

SUBMITTAL IDENTIFICATION & CONTRACTOR'S APPROVAL STATEMENT

DATE: _____ COPIES _____ DRAWING SHEET NO._____

Description submittal contents: _____
Location: _____
Manufacturer_____
Subcontractor or Supplier (Optional) _____

REMARKS: _____
_____
_____
_____

CONTRACTOR'S APPROVAL

(Construction Company) has reviewed and coordinated the submitted documentation and verifies that the equipment and material meet the requirements of the Work and the Contract Documents. We accept sole responsibility for determining and verifying all quantities, dimensions, field construction criteria, materials, catalog numbers, and similar data contained in the submittal as required by the Contract Documents.

Deviations: □ None □ Yes (See attached Figure 2-01300 for written description)

Approved By: _____ Date: _____

This approval does not release subcontractor / vendor from the contractual responsibilities.

Black & Veatch
Project No. _____Phase_____
Contract No. _____
Project Description: _____
_____

SUBMITTAL No. _____
SECTION _____
Do not combine multiple sections together
unless required by specifications.

(Contractor's Letterhead)

SUBMITTAL IDENTIFICATION & CONTRACTOR'S APPROVAL STATEMENT

DATE: _____ COPIES _____ DRAWING SHEET NO._____

Description submittal contents: _____
Location: _____
Manufacturer_____
Subcontractor or Supplier (Optional) _____

DEVIATIONS

_____
_____
_____
_____
_____
_____
_____
_____
_____
_____
_____
_____
_____
_____
_____
_____
_____
_____
_____
_____
_____
_____
_____
_____
_____
_____

Black & Veatch
Project No. _____Phase_____
Contract No. _____
Project Description: _____
_____

Section 01310

CONSTRUCTION PROGRESS SCHEDULE

1. GENERAL OVERVIEW. A Progress Schedule shall be used to control the Work and to provide a definitive basis for determining project progress. The Progress Schedule shall be prepared, maintained and updated by Contractor and historical dates agreed monthly with Engineer. Contractor shall submit a preliminary Progress Schedule and a Progress Schedule for acceptance by Engineer. These schedules shall be Contractor's working schedules and shall be used to plan, organize and execute the Work, record and report actual performance and progress, and show how Contractor plans to complete all remaining Work as of the end of each progress report period.

The Progress Schedule shall comprise all the detailed construction-related activities using the critical path method (CPM). The Progress Schedule shall provide sufficient detail and clarity to reflect the intricacies and interdependencies of activities so Contractor can plan, schedule, monitor, control and report on the progress of its work. In addition, it shall provide Engineer and Owner a tool to monitor and follow the progress for all phases of the Work.

The Contractor shall have the capability of preparing and utilizing the specified construction progress scheduling techniques. A statement of capability shall be submitted in writing to the Engineer with the return of the executed Agreement to the Owner and will verify that either the Contractor's organization has in-house capability qualified to use the technique or that the Contractor employs a consultant who is so qualified. Capability shall be verified by description of the construction projects to which the Contractor or its consultant has successfully applied the scheduling technique and which were controlled throughout the duration of the project by means of systematic use and updating of the construction progress schedule, the network analysis and associated reports. The submittal shall include the name of the individual on the Contractor's staff who will be responsible for the construction progress schedule and associated reports and for providing the required updating information of same. The Contractor shall submit its proposed progress schedule to the Engineer for review and comment within ten days of the Notice to Award.

2. PRE-CONSTRUCTION SCHEDULING CONFERENCE. The Contractor shall present and discuss the proposed schedule at the preconstruction conference.

3. PRELIMINARY PROGRESS SCHEDULE. Not used.

4. PROGRESS SCHEDULE. The Progress Schedule comprises all the construction-related activities for the Work and shall show the order in which Contractor proposes to carry out the work. Contractor shall include milestones, coordination necessitated by limited access and available work areas, and the availability and use of workforce, material and equipment. Contractor shall use

the Progress Schedule to plan, schedule and coordinate the Work including activities of subcontractors, equipment vendors, and suppliers.

The Progress Schedule shall be to the level of detail acceptable to Engineer, and shall include the following:

a. Organization and structural breakdown of the Project;
b. Milestones and completion dates;
c. Planning for phased or total acceptance by Owner;

Each computer-generated construction progress schedule and associated report shall include the following tabulations: a list of activities in numerical order, a list of activity precedence, schedules sequenced by Early Start Date, Total Float, and Late Start Date. Each schedule and report shall include the following minimum items.

i. Activity Numbers.
ii. Estimated Duration.
iii. Activity Description.
iv. Early Start Date (Calendar Dated).
v. Early Finish Date (Calendar Dated).
vi. Latest Allowable Start Date (Calendar Dated).
vii. Latest Allowable Finish Date (Calendar Dated).
viii. Status (whether critical).
ix. Total Float and Free Float.
x. Resource Plots.

In addition, each construction progress schedule, network analysis and report shall be prefaced with the following summary data:

i. Contract Name and Number.
ii. Contractor's Name.
iii. Contract Duration and Float.
iv. Contract Schedule with critical path.
v. The Effective or Starting Date of The Schedule (the date indicated in the Notice-to-Proceed).

The work day to calendar date correlation shall be based on an 8-hour day and 40-hour week with adequate allowance for holidays, adverse weather and all other special requirements of the Work. Normal work hours are Monday through Friday, 7:30 am to 5:30 pm, any afterhours/weekends work must be approved by the Owner.

To the extent that the construction project schedule, or associated report or any revision thereof shows anything not jointly agreed upon or fails to show anything jointly agreed upon, it shall not be deemed to have been accepted by the Engineer. Failure to include on a schedule any element of Work required for the performance of this Contract shall not excuse the Contractor from completing all

Work required within any applicable completion date, notwithstanding the review of the schedule by the Engineer.

Review and acceptance of the construction progress schedule, and related reports, by the Engineer is advisory only and shall not relieve the Contractor of the responsibility for accomplishing the Work within the contract completion date. Omissions and errors in the construction progress schedule, and related reports shall not excuse performance less than that required by the Contract and in no way make the Engineer an insurer of the Contractor's success or liable for time or cost overruns flowing from any shortcomings in the construction progress schedule, and related reports.

The construction progress schedule shall be based upon the precedence diagramming method of scheduling and shall be prepared in the form of a horizontal bar chart showing in detail the proposed sequence of the Work and identifying all construction activities included but not limited to yard piping, all structures and treatment units and all related Work specified herein to be performed under the Contract. The schedule shall be time scaled, identifying the first day of each week, with the estimated date of starting and completion of each stage of the Work in order to complete the project within the contract time. The project critical path shall be clearly identified.

When the Progress Schedule is accepted by Engineer, Engineer will save a copy of the Progress Schedule as the baseline schedule, and will use it for analysis of Contractor's progress.

5. ELECTRONIC PROGRESS SCHEDULE FORMAT AND REPORTING. The Progress Schedule shall be created using Primavera P6, or equal, scheduling software.

The data date for schedule calculation in the Progress Schedule shall be set as the date of the Notice to Proceed unless otherwise specified by Engineer.

6. COST-LOADING. Not used.

7. RESOURCE-LOADING. Not used.

8. COORDINATING PROGRESS SCHEDULE WITH OTHER CONTRACT SCHEDULES. Not used.

9. SUBMITTALS. The Progress Schedule and associated reports shall be submitted to Engineer for acceptance within 15 calendar days after Notice to Proceed. If the Progress Schedule is not submitted, no progress payments will be made after the due date until the Progress Schedule has been submitted.

The progress schedule shall be plotted to a 22-inch by 34-inch size and shall be revised and updated monthly, depicting progress through the last day of the current month and scheduled progress through completion. An electronic version

of the schedule shall be submitted along with the application for monthly progress payments for the same period.

10. MONTHLY SCHEDULE UPDATES. Monthly Progress Schedule updates shall be submitted for the duration of the Contract on a date agreed to by Owner, Engineer, and Contractor.

The updated schedule shall be reviewed each month in a meeting with Engineer to verify:

a. Actual start dates,
b. Actual completion dates,
c. Activity percent completion,
d. Cost influence of change orders, if any,
e. Revisions due to extension of time.

Prior to each meeting, Contractor shall prepare a complete and accurate report of current procurement and construction progress through the end of the update period, and a depiction of how Contractor plans to continue the Work to meet all contract completion dates. All network changes and status data agreed to during each update meeting shall be considered as accepted by both parties unless written notice of any exceptions is given within five calendar days after the meeting.

If the Contractor desires to make changes in its method of operating which affect the construction progress schedule and related items, it shall notify the Engineer in writing stating what changes are proposed and the reason for the change. If the Engineer accepts these changes, in writing, the Contractor shall revise and submit, without additional cost to the Owner, all of the affected portions of the construction progress schedule, and associated reports. The construction progress schedule and related items shall be adjusted by the Contractor only after prior acceptance, in writing by the Engineer. Adjustments may consist of changing portions of the activity sequence, activity durations, division of activities, or other adjustments as may be required. The addition of extraneous, nonworking activities and activities which add restraints to the construction progress schedule shall not be accepted.

11. DATA DATE. Not used.

12. REVIEW PROCESS. Not Used

13. RESPONSIBILITY FOR SCHEDULE COMPLIANCE. Whenever it becomes apparent from the current Progress Schedule that the critical path is delayed and the contract completion date will not be met, Contractor shall mitigate the delay by taking some or all of the following actions at no additional cost to Owner:

a. Increase construction workforce in such quantities and crafts as will bring the project back on schedule within the completion dates and milestones.

b. Increase the number of working hours per shift, shifts per day, working days per week, and the amount of construction equipment, or any combination of the foregoing, to substantially eliminate the backlog of work.

c. Re-schedule activities to achieve maximum practical concurrence of activities and to comply with the schedule date(s).

Within 10 calendar days of Engineer's request, Contractor shall submit a recovery schedule and written statement of the steps intended to remove or arrest the delay to the critical path in the schedule. If Contractor fails to submit the required information or should fail to take measures acceptable to Engineer, Engineer with Owner concurrence may direct Contractor to increase workforce, equipment and scheduled work hours to remove or arrest the delay to the critical path and Contractor shall promptly provide such level of effort at no additional cost to Owner.

In the event Contractor fails to follow the updated or revised recovery schedule, Owner may elect to withhold progress payments until Contractor complies with the revised schedule.

Should Contractor's efforts not remove or arrest the delay to the critical path of the accepted schedule, then Owner shall be entitled to supplement Contractor's work-force and equipment to remove and arrest any delay, and shall be entitled to deduct all costs and expenses associated therewith from payments due to Contractor. If insufficient Contract funds remain, Owner may recover such funds from Contractor and its Surety.

Except where earlier completions are specified, schedule dates which show completion of all Work prior to the contract completion date shall, in no event, be the basis for claim for delay against the Owner by the Contractor.

Construction progress schedules and related items which contain activities showing negative float or which extend beyond the contract completion date will be accepted only upon the condition that the Contractor will comply with recovery schedule requirements.

14. CHANGES IN THE WORK, DELAYS, AND EXTENSIONS OF TIME. The contract time will be adjusted only in accordance with the General Requirements and other portions of the Contract Documents as may be applicable. If the Engineer finds that the Contractor is entitled to any extension of the contract completion date, the Engineer's determination as to the total number of days extension shall be based upon the current construction progress schedule and on all data relevant to the extension. Such data shall be included in the next

updating of the schedule and related items. Actual delays in activities which, according to the construction progress schedule, do not affect any contract completion date will not be the basis for a change therein.

From time to time it may be necessary for the contract schedule of completion time to be adjusted by the Owner in accordance with the General Requirements and other portions of the Contract Documents as may be applicable. Under such conditions, the Engineer will direct the Contractor to reschedule the Work or contract completion time to reflect the changed conditions, and the Contractor shall revise the construction progress schedule and related items accordingly, at no additional cost to the Owner.

Available float time may be used by the Owner through the Owner's Engineer.

The Owner controls the float time and, therefore, without obligation to extend either the overall completion date or any intermediate completion dates, the Owner may initiate changes that absorb float time only. Owner initiated changes that affect the critical path on the network diagram shall be the sole grounds for extending the completion dates. Contractor initiated changes that encroach on the float time may be accomplished only with the Owner's concurrence. Such changes, however, shall give way to Owner-initiated changes competing for the same float time.

Each time impact analysis shall demonstrate the estimated time impact based on the events of the change or the delay; the date the change was given to Contractor or the delay incurred, the status of construction at that point in time, and the event time computation of all activities affected by the change or delay. The event times used in the analysis shall be those included in the latest update of the Progress Schedule or as adjusted for the events of delay.

Three copies of the time impact analysis and an electronic copy on compact disk shall be submitted within seven calendar days of delay occurrence or direction to proceed with a change is given to Contractor. No time extensions will be considered if the time impact analysis is not submitted within the specified time.

Engineer will review Contractor’s time impact analysis. Contractor shall furnish such justification and supporting evidence as Engineer deems necessary to determine whether Contractor is entitled to an extension of time. Engineer’s review of each time impact analysis will be made within five working days of receipt of the time impact analysis and additional information as required by Engineer, unless subsequent meetings and negotiations are necessary.

The Contract Times will be adjusted only for causes specified in paragraph 15. Time extensions will be granted only to the extent that equitable time adjustments for the activity or activities affected exceed the total or remaining Float along the critical path at the time of actual delay. Delays in activities which

are not on the critical path and do not affect Contract Times, will not be considered for an extension of time.

15. CAUSES FOR EXTENSIONS OF TIME. Additional positive total Float in the Progress Schedule generated by efficiencies of Owner or Contractor is a shared commodity to be reasonably used by either party, and belongs exclusively to the Project. Contractor is not entitled to any additional compensation for completion of the project prior to expiration of the Contract Times.

15.01. Owner-Initiated Changes. Owner initiated changes to the Work that absorb Float time will not be considered for an extension of time. Owner-initiated changes that affect the critical path of the Progress Schedule shall be grounds for extending or shortening completion dates. Use of Float time for Contractor initiated changes will require Owner's concurrence. Contractor's changes, however, shall give way to Owner-initiated changes competing for the same Float time.

15.02. Outside Contractor's Control. Events outside of Contractor's control that affect the critical path of the Progress Schedule will be considered for an extension or reduction of the Contract Times.

15.03. Weather Delays. Engineer will determine Contractor's entitlement to an extension of the Contract Times as a result of weather delays.

Any weather-related extension of Contract Times shall be non-compensable. Efficiencies gained as a result of favorable weather within a calendar month, where the number of days of normally anticipated weather days is less than expected, shall contribute to the project Float and shall not affect the Contract Times.

16. AS-BUILT SCHEDULE. Not used.

17. SCHEDULING SOFTWARE APPLICATION. Not used.

18. SCHEDULE SOFTWARE SETTINGS AND RESTRICTIONS: Not used.

19. ACTIVITY CODES. Not used.

20. ACTIVITY RELATIONSHIPS. Not used.

21. PROJECT CALENDARS. Not used.

22. FLOAT. Contractor shall not use Float suppression techniques, including preferential sequencing (arranging critical path through activities more susceptible to Owner caused delay); lag logic restraints; zero total or free Float constraints; extended activity times; or imposing constraint dates other than as required by the Contract. Float suppression will be cause for rejection of the preliminary Progress Schedule or full Progress Schedule and its updates.

23. MANDATORY MILESTONES. The Contract duration shall be equal to the time period between the Notice to Proceed and the completion of the Work in readiness for final payment. The following milestones are mandatory.

a. Notice to Proceed.
b. Milestones, if any, as indicated in Contractor's Bid.
c. Substantial Completion as indicated in Contractor's Bid.
d. Completion and readiness for final payment, as indicated in Contractor's Bid.

End of Section

Section 01320

CONSTRUCTION PROGRESS DOCUMENTATION

1. GENERAL.

1.01. Units of Measurement. When both inch-pound (English) and SI (metric) units of measurement are specified herein, the values expressed in inch-pound units shall govern.

2. SCHEDULE OF VALUES. After review of the preliminary schedule at the preconstruction conference, and before submission of the first Application for Payment, Contractor shall prepare and submit to Engineer a Schedule of Values covering each lump sum item. The Schedule of Values, showing the value of each kind of work, shall be acceptable to Engineer before any Application for Payment is prepared.

The sum of the items listed in the Schedule of Values shall equal the Contract Price. Such items as Bond premium, temporary construction facilities, and plant may be listed separately in the Schedule of Values, provided the amounts can be substantiated. Overhead and profit shall not be listed as separate items.

The Schedule of Values shall have sufficient detail such that partial completion of separable items of work can easily be calculated. The Schedule of Values shall have separate lines for manufacturer's field services, O&M manuals, and performance testing for each item of equipment requiring such services.

An unbalanced Schedule of Values providing for overpayment of Contractor on items of Work which would be performed first will not be accepted. The Schedule of Values shall be revised and resubmitted until acceptable to Engineer. Final acceptance by Engineer shall indicate only consent to the Schedule of Values as a basis for preparation of applications for progress payments, and shall not constitute an agreement as to the value of each indicated item.

3. SCHEDULE OF PAYMENTS. Within 30 days after award of contract, Contractor shall furnish to Engineer a schedule of estimated monthly payments. The schedule shall be revised and resubmitted each time an Application for Payment varies more than 10 percent from the estimated payment schedule.

4. SURVEY DATA. Not used.

5. LAYOUT DATA. Not used.

End of Section

Section 01380

CONSTRUCTION PHOTOGRAPHS

PART 1 - GENERAL

1. SUMMARY. This section includes providing construction photographs and video pertinent to the Contract work during the Contract period as specified.

1.01. Pre-Construction Photographs. A minimum of thirty (30) photographs of the entire site, or pertinent features thereof, shall be taken before the commencement of Work and promptly submitted to Engineer. These photographs shall include roads, fences, sidewalks, manholes, trees, and existing facilities.

1.02. Post-Construction Photographs. The same views captured in the pre-construction photographs shall be rephotographed upon completion of all construction activities and submitted with Contractor's application for final payment.

1.03. Intermittent Construction Photographs. During each calendar month of construction, a minimum of 50 photographs shall be taken of all new construction as the Work progresses.

Intermittent photographs shall be submitted with Contractor's application for progress payment.

2. PHOTOGRAPH FORMAT AND ORGANIZATION. Photographs shall be taken in color and shall be taken and submitted to the Engineer in digital format.

2.01. Resolution. All photographs shall be JPEG (Joint Photographic Experts Group) with a minimum resolution of 1024x768 pixels and a maximum resolution of 1280x1024 pixels.

2.02. Filenames. All photograph filenames shall follow a syntax of

YYYY-MM-DD_LOC_DESC.jpg

Where,
YYYY = the four-digit year.
MM = the two-digit month.
DD = the two-digit day.
LOC = the site location where the photograph was taken.
DESC = a general description of the subject of the photograph.

2.03. Media. Contractor shall submit the photographs electronically on a flash drive. Files may be grouped into descriptive folders as necessary.

3. SUBMITTALS. Files shall be submitted to the Engineer in accordance with the provisions of the Submittals Procedures section.

End of Section

Section 01400

QUALITY CONTROL

1. GENERAL. The Contractor shall develop and maintain a program, acceptable to Owner and Engineer, to ensure that all work required under this Contract strictly conforms to all requirements of the Contract Documents. The Contractor shall be responsible for and shall supervise the work of all subcontractors, providing instructions to each when their work does not conform to the requirements of the Quality Control Program and the Contract Documents

2. SAMPLING AND TESTING. Unless otherwise specified, all sampling and testing shall be in accordance with the methods prescribed in the current standards of the ASTM, as applicable to the class and nature of the article or materials considered; however, the Owner reserves the right to use any generally-accepted system of sampling and testing which, in the opinion of the Engineer will insure the Owner that the quality of the work is in full accord with the Contract Documents.

Any waiver by the Owner of any specific testing or other quality assurance measures, whether or not such waiver is accompanied by a guarantee of substantial performance as a relief from the specified testing or other quality assurance requirements as originally specified, and whether or not such guarantee is accompanied by a performance bond to assure execution of any necessary corrective or remedial Work, shall not be construed as a waiver of any requirements of the Contract Documents.

Notwithstanding the existence of such waiver, the Engineer reserves the right to make independent investigations and tests and failure of any portion of the Work to meet any of the requirements of the Contract Documents, shall be reasonable cause for the Engineer to require the removal or correction and reconstruction of any such Work in accordance with the General Conditions.

Testing services shall be provided in accordance with Article 49 of the General Conditions. All tests to determine compliance with the Contract Documents shall be performed by an independent commercial testing firm acceptable to Engineer and/or Authority Having Jurisdiction excluding testing as specified to be conducted directly by Contractor. The testing firm's laboratory shall be staffed with experienced technicians, properly equipped and fully qualified to perform the tests in accordance with the specified standards.

Testing services provided by Owner are for the sole benefit of Owner and/or as required by the governing building code; however, test results shall be available to Contractor. Testing necessary to satisfy Contractor's internal quality control procedures shall be the sole responsibility of Contractor.

2.01. Testing Services Provided by Contractor. Unless otherwise specified, Contractor shall provide all testing services in connection with the following:

a. Any Work or part thereof specifically to be inspected, tested or approved by an employee or representative of an Authority Having Jurisdiction. Contractor shall assume full responsibility for arranging and obtaining such inspections, tests or approvals. Contractor shall pay all costs associated for these activities and shall provide the required certificates of inspection or approval.

b. Any inspections, tests or approvals required for Owner or Engineer acceptance of materials or equipment to be incorporated in the Work. This includes any items required for acceptance of materials, concrete mix designs or equipment submitted for approval prior to Contractor's purchase for incorporation in the Work.

c. Testing, adjusting and balancing of mechanical, electrical and other equipment and systems as specified to be incorporated into the Work. This includes services required by manufacturers of equipment or other products such as concrete repair products, pipe, coatings, linings and roof membranes furnished under the Contract Documents.

d. Tightness testing of containment structures and pressure or leakage testing of piping as specified.

e. Any Work (or part thereof) required by the Contract Documents to be approved by Owner, Engineer or other designated individual or entity. Contractor shall assume full responsibility for arranging and obtaining such approvals, pay all costs in connection therewith and submit to Engineer the required certificates of approval.

Excluding those conducted directly by an Authority Having Jurisdiction or expressly specified to be conducted directly by Contractor, inspections and tests shall be performed by independent inspectors, approved agencies or other qualified individuals or entities acceptable to Owner and Engineer.

2.02. Testing Services and Special Inspections Provided by Owner. Unless otherwise specified, Owner shall employ and pay for the services of an independent testing laboratory, approved agency or other qualified individual or entities for inspections, tests or approvals required by the Contract Documents for field quality control.

Contractor shall provide access to the site and Work in accordance with the General Conditions. Contractor shall give timely notice of the readiness of the Work for inspection, tests or approvals and shall cooperate with the inspection and testing personnel to facilitate the required tests and inspections. Contractor shall furnish all sample materials and cooperate in the testing activities, including sampling. Contractor shall interrupt the Work when necessary to allow testing, including sampling, to be performed. Contractor shall have no Claim for an increase in Contract Price or Contract Times due to such interruption. When testing activities, including sampling, are performed in the field by Engineer or

Agency personnel, Contractor shall furnish personnel and facilities to assist in the activities as required.

2.03. Transmittal of Test Reports. Written reports of tests and engineering data furnished by Contractor for Engineer's review of materials and equipment proposed to be used in the Work shall be submitted as specified for Shop Drawings.

The Approved Agency retained by Owner will furnish four copies of a written report of each test. Two copies of each test report will be transmitted to the Resident Project Representative, one copy to Engineer, and one copy to Contractor, within three days after each test is completed.

3. SITE INVESTIGATION AND CONTROL. The Contractor shall verify all dimensions in the field and shall check field conditions continuously during construction. The Contractor shall be solely responsible for any inaccuracies built into the Work due to its failure to comply with this requirement.

The Contractor shall inspect related and appurtenant Work and shall report in writing to the Engineer any conditions which will prevent proper completion of the Work. Failure to report any such conditions shall constitute acceptance of all site conditions, and any required removal, repair, or replacement caused by unsuitable conditions shall be performed by the Contractor within the scope of the Project

4. RIGHT OF REJECTION. The Engineer, acting for the Owner, shall have the right, at all times and places, to reject any articles or materials to be furnished hereunder which, in any respect, fail to meet the requirements of the Contract Documents, regardless of whether the defects in such articles or materials are detected at the point of manufacture or after completion of the Work at the site. If the Engineer or its representative, through an oversight or otherwise, has accepted materials or Work which is defective or which is contrary to the Contract Documents, such materials, no matter in what stage or condition of manufacture, delivery, or erection, may be subsequently rejected by the Engineer for the Owner.

The Contractor shall promptly remove rejected articles or materials from the site of the Work after notification of rejection. All costs of removal and replacement of rejected articles or materials as specified herein shall be borne by the Contractor

5. OTHER CONSTRUCTION CONSIDERATIONS.

5.01. Weather Conditions. Work that may be affected by inclement weather shall be suspended until proper conditions prevail. In the event of impending storms, the Contractor shall take necessary precautions to protect all work, materials and equipment from exposure.

5.02. Fire Protection. The Contractor shall take all necessary precautions to prevent fires at or adjacent to the Work, including its own buildings and trailers. Adequate fire extinguisher and hose line stations shall be provided throughout the work area.

6. OFFSITE INSPECTION. Not used.

7. MANUFACTURER'S FIELD SERVICES. Not used.

End of Section

Section 01450

CODE REQUIRED SPECIAL INSPECTIONS AND PROCEDURES

PART 1 - GENERAL

1-1. SCOPE. Owner, or Registered Design Professional in Responsible Charge of construction acting as Owner's Agent, will engage one or more Approved Agencies to conduct tests and special inspections specified in this section and related sections, and as may be specified in other sections of these specifications. The Approved Agency shall not be employed by Contractor or a supplier materially participating in the project.

1-2. GENERAL. This Section includes administrative and procedural requirements indicated in the governing building code.

Structural testing and special inspection services are required to verify compliance with the construction documents and standards referenced herein. These services do not relieve Contractor of responsibility for compliance with the construction documents.

Specific quality-assurance and quality-control requirements for individual construction activities are also referenced in other Sections. Requirements in those Sections may also cover production of standard products.

Specified tests, inspections, and related actions do not limit Contractor's other quality-assurance and quality-control procedures that facilitate compliance with the construction documents.

Requirements for Contractor to provide quality-assurance and quality-control services required by Engineer, Owner, or Authority Having Jurisdiction (AHJ) are not limited by provisions of this Section.

1-3. DEFINITIONS.

Approved Agency: An established and recognized agency regularly engaged in conducting tests or furnishing inspection services, when such agency has been approved by the Authority Having Jurisdiction.

Approved Fabricator: An established and qualified person, firm or corporation registered and approved by the Authority Having Jurisdiction to perform work without Special Inspection.

Authority Having Jurisdiction (AHJ): The officer or other designated authority charged with the administration and enforcement of the building code, or a duly authorized representative. Also commonly known as the Building Official.

Construction Documents: Written, graphic and pictorial documents prepared or assembled for describing the design, location and physical characteristics of the elements of a project necessary for obtaining a building permit. Construction documents include all supplemental instructions, sketches, addenda, and revisions to the drawings and specifications issued by the Registered Design Professional beyond those issued for a building permit.

Pre-Engineered Structural Elements: Structural elements specified by the Registered Design Professional but which may be designed by another Registered Design Professional. (Examples are items such as open web steel joists and joist girders, metal joists, pre-cast concrete elements, pre-fabricated metal buildings, pre-stressed wire wrapped tanks, tilt-up concrete panel reinforcement and lifting hardware.)

Registered Design Professional (RDP): An individual who is registered or licensed to practice their respective design profession as defined by the statutory requirements of the professional registration laws of the state or jurisdiction in which the project is to be constructed.

Registered Design Professional in Responsible Charge (RDPRC): A Registered Design Professional engaged by Owner to review and coordinate certain aspects of the project, as determined by the AHJ and Construction Documents, for compatibility with the design of the buildings or structure, including submittal documents prepared by others, deferred submittal documents and phased submittal documents.

Shop Drawings / Submittal Data: Written, graphic and pictorial documents prepared and / or assembled by Contractor or Supplier based on the Construction Documents.

Special Inspection: Inspection and/or testing required by the governing building code, as amended by the AHJ, of the materials, installation, fabrication, erection or placement of components and connections requiring special expertise to ensure compliance with approved Construction Documents and referenced standards.

Special Inspection, Continuous: The full-time observation or testing of work requiring special inspection by an approved Special Inspector who is present in the area where the work is being performed.

Special Inspection, Periodic: The part-time or intermittent observation or testing of work requiring Special Inspection by an approved Special Inspector who is present in the area where the work has been or is being performed and at the completion of the work.

Special Inspector: A qualified person demonstrating competence, to the satisfaction of the AHJ and RDPRC, for inspection of the particular type of construction or operation requiring special inspection. The Special Inspector will be qualified as specified herein.

Structural Observations: Visual observation of the structural system by a Registered Design Professional for general conformance to the approved Construction Documents.

Structural observations are not considered part of the tests and special inspections and do not replace inspections and testing by the Approved Agency. Owner will employ a RDP to perform Structural Observations.

Testing Agency: A qualified materials testing laboratory under the responsible charge of a Registered Design Professional, approved by the AHJ and the RDPRC, to measure, examine, test, calibrate, or otherwise determine the characteristics or performance of construction materials and verify confirmation with construction documents.

1-4. INSPECTION AND TESTING AGENCY QUALIFICATIONS. Special Inspectors and testing agencies will be employed or retained by Owner, and will have the minimum qualifications as described in this section. The qualifications of all personnel performing special inspection and testing activities are subject to the approval of the AHJ.

Minimum qualifications of inspection and testing agencies and their personnel will comply with ASTM E329 "Standard Specification for Agencies Engaged in Construction Inspection, Testing, or Special Inspection," or IAS AC 291 "Accreditation Criteria for Special Inspection Agencies."

Inspectors and individuals performing tests will be certified for the work being performed as listed below and in Table 1 of IAS AC291, or by alternate certifications when acceptable to the AHJ. The AHJ may have additional requirements.

Abbreviation used in this Section	**Description**
AIA	Architect licensed in the state of the project, specializing in the design of building structures
Licensed Engineers	
PE/SE	Structural Engineer (SE) or Professional Engineer (PE) licensed in the state of the project, specializing in the design of building structures
PE/GE	Geotechnical Engineer (GE) or Professional Engineer (PE) licensed in the state of the project, specializing in soil mechanics and foundations
PE/EE	Electrical Engineer (EE) or Professional Engineer (PE) licensed in the state of the project, specializing in electrical systems
PE/ME	Mechanical Engineer (ME) or Professional Engineer (PE) licensed in the state of the project, specializing in mechanical systems
EI/EIT	Engineering Intern or Engineer-in-Training: a graduate engineer who has passed the Fundamentals of Engineering examination working under the direct supervision of a Professional Engineer licensed in the state of the project and with a minimum of one year of experience performing inspections.

Abbreviation used in this Section	Description
American Concrete Institute (ACI) Certification	
ACI-CFTT	Concrete Field Testing Technician – Grade 1
ACI-CCI	Concrete Construction Inspector
ACI-LTT	Laboratory Testing Technician – Grade 1 or 2
ACI-STT	Strength Testing Technician
American Welding Society (AWS) Certification	
AWS-CWI	Certified Welding Inspector
AWS/AISC-SSI	Certified Structural Steel Inspector
American Society of Non-Destructive Testing (ASNT) Certification	
ASNT	Non-Destructive Testing Technician For Ultrasonic Testing (UT) and Radiographic Testing (RT) Certified as Level III through examination by ASNT or certified as Level II by their employer for flaw detection. For Magnetic Particle Testing (MT) and Liquid Penetrant Testing (PT) certified as Level II by their employer or certified as Level III through examination by ASNT and certified by their employer
International Code Council (ICC) Certification	
ICC-SMSI	Structural Masonry Special Inspector
ICC-SWSI	Structural Steel and Welding Special Inspector
ICC-SFSI	Spray-Applied Fire-proofing Special Inspector
ICC-PCSI	Prestressed Concrete Special Inspector
ICC-RCSI	Reinforced Concrete Special Inspector
ICC-SBSI	Structural Steel and Bolting Special Inspector
ICC-WSI	Structural Welding Special Inspector
National Concrete Masonry Association	
NCMA	Concrete Masonry Testing Technician
National Institute for Certification in Engineering Technologies (NICET)	
NICET-CT	Concrete Technician – Levels II, III & IV
NICET-ST	Soils Technician - Levels II, III & IV
NICET-GET	Geotechnical Engineering Technician - Levels II, III & IV
Exterior Design Institute (EDI) Certification	

Abbreviation used in this Section	Description
EDI-EIFS	EIFS Third Party Inspector

Inspection or Testing Item	Qualification Standards
Fabricators	Varies by product as listed below
Steel Construction – Welding Inspection	ICC-SWSI, ICC-WSI, AWS-CWI or AWS/AISC-SSI
Steel Construction – Non-Destructive Weld Testing	ASNT
Steel Construction – Details	PE/SE, ICC-SWSI, ICC-SBSI or AWS/AISC-SSI
Steel Construction – High Strength Bolts	PE/SE or ICC-SBSI
Concrete Construction - Field Tests	ACI-CFTT or NICET-CT
Concrete Construction - Field Inspection	PE/SE, ICC-RCSI, ACI-CCI or NICET-CT
Concrete Construction - Laboratory Testing	ACI-LTT, ACI-STT or NICET-CT
Prestressed Concrete Construction	ICC-PCSI
Masonry Construction - Field Inspection	PE/SE or ICC-SMSI
Masonry Construction - Laboratory Testing	NCMA
Soils (special grading, excavation and filling)	PE/GE, NICET-ST or NICET-GET under the direct supervision of Registered Civil (geotechnical) Engineer
Pile Foundations	PE/GE, Appropriate structural material inspection and NICET-ST or NICET-GET under the direct supervision of Registered Civil (geotechnical) Engineer
Pier Foundations	PE/GE, Appropriate structural material inspection and NICET-ST or NICET-GET under the direct supervision of Registered Civil (geotechnical) Engineer
Wall Panels and Veneers	ICC-SMSI
Sprayed Fire-Resistant Materials	ICC-SFSI
Exterior Insulation and Finish Systems (EIFS)	ICC Building Inspector or EDI-EIFS
Post Installed Anchors in Concrete	ICC Building Inspector, ICC-RCSI, or PE/SE
Post Installed Anchors in Masonry	ICC Building Inspector, ICC-SMSI, or PE/SE
Smoke Control Systems	IBC 1705.18.2
Other Architectural Systems	ICC Building Inspector, AIA, or PE/SE
Mechanical Systems	ICC Building Inspector or PE/ME
Electrical Systems	See NFPA 70

1-5. CONFLICTING REQUIREMENTS, REPORTS AND TEST RESULTS.

1-5.01. General. If compliance with two or more standards is specified and the standards establish different or conflicting requirements for minimum quantities or quality levels, comply with the most stringent requirement. Refer uncertainties and requirements that are different, but apparently equal, to the RDPRC for a decision before proceeding.

1-5.02. Minimum Quantity or Quality Levels. The quantity or quality level shown or specified shall be the minimum provided or performed. The actual installation may comply exactly with the minimum quantity or quality specified, or it may exceed the minimum within reasonable limits. To comply with these requirements, indicated numeric values are minimum or maximum, as appropriate, for the context of requirements. Refer uncertainties to the RDPRC for a decision before proceeding.

1-5.03. Precedence. The Approved Agency reports and testing results shall have precedence over reports and test results provided by Contractor.

1-5.04. Conflict. Where a conflict exists between the construction documents and approved shop drawings/submittal data, the construction documents shall govern unless the shop drawings/submittal data are more restrictive. All conflicts shall be brought to the attention of the RDPRC.

1-6. TECHNICAL ATTACHMENTS. The following forms are required as part of the comprehensive administrative, testing and inspection requirements. The forms are available from the AHJ, or are included herein, as indicated:

Form Title	AHJ Provided	Included Herein	Notes
Statement of Special Inspections (SSI)		x	To be completed jointly by the RDPRC and the Approved Agency, and sealed by the RDPRC after completion. Contractor or Owner shall submit the form to the AHJ as part of the building permit application process.
Request for Approval of Special Inspector		x	To be completed by Approved Agency. Approved Agency will submit the form to the AHJ and RDPRC for their approval of individual inspectors.

Request for Approval to Provide Special Inspection of Non-Local Fabrication		x	To be completed by Approved Agency and submitted to Owner, AHJ and RDPRC.
Contractor's Statement of Responsibility		x	To completed by Contractor and his relevant suppliers and submitted to Owner and AHJ.
Fabricator's Certificate of Compliance		x	To be completed by Contractor's fabricators, as applicable, and submitted to AHJ.
Final Report of Special Inspections		x	To be completed and sealed by Approved Agency. Approved Agency or Owner will submit to AHJ at the completion of construction.

PART 2 – PRODUCTS (Not Used)

PART 3 – EXECUTION

3-1. CONTRACTOR AND FABRICATOR RESPONSIBILITIES. Each Fabricator or Contractor responsible for the construction of a seismic-force-resisting system, designated seismic system, seismic resisting component, main wind force-resisting system, or a wind-resisting component listed in the SSI shall submit a Contractor's Statement of Responsibility to the AHJ and to Owner prior to the commencement of work.

To be considered an Approved Fabricator that may perform work without Special Inspection, the Fabricator shall submit copies of certifications from the International Accreditation Service (IAS) or other recognized and acceptable accreditation organization a minimum of 30 days prior to the start of fabrication. Acceptance as an Approved Fabricator is subject to approval by the AHJ. If the project specifications required an Approved Fabricator, and the AHJ does not accept the Fabricator as an Approved Fabricator, special inspection may become necessary in the fabricator's shop. Such inspections will be performed by Approved Agency and Contractor shall reimburse Owner for the cost for the inspections.

Contractor shall assist in coordination of the inspection and testing services with the progress of the work. Contractor shall provide sufficient notice to allow proper scheduling of all inspection and testing personnel. Contractor shall provide safe access

to inspection and testing personnel and shall ensure that all work requiring special inspection is inspected and/or tested prior to concealment.

Contractor shall submit schedules to Owner, RDPRC and testing and inspecting agencies. Schedules will note milestones and durations of time for materials requiring tests and special inspections.

Contractor shall provide the Special Inspector access to approved plans at the job site or fabrication shop as applicable.

Contractor shall retain at the job site or fabrication shop, as applicable, all special inspection records submitted by an Approved Agency or Special Inspector and shall provide these records for review by the AHJ's inspector upon request.

Contractor shall repair and/or replace work that does not meet the requirements of the construction documents.

Contractor shall engage an engineer to prepare repair and/or replacement procedures for any deficiencies identified. Contractor's engineer shall be registered in the state in which the project is located. Contractor's engineer shall be acceptable to the RDPRC, AHJ, and Owner. Procedures shall be submitted for review and acceptance by the RDPRC, AHJ, and Owner before proceeding with corrective action.

Contractor shall be responsible for costs of:

> Re-testing and re-inspection of materials, work, and/or products that do not meet the requirements of the Contract Documents or shop drawing/submittal data.
>
> Review of proposed repair and/or replacement procedures by the RDPRC and the inspectors and testing agencies.
>
> Repair or replacement of work that does not meet the requirements of the Construction Documents.

3-2. APPROVED AGENCY AND SPECIAL INSPECTOR RESPONSIBILITIES.

3-2.01. Preliminary Approvals. The Approved Agency will submit a "Request for Approval of Special Inspector" form to the AHJ for each proposed Special Inspector or testing technician. The form will include the individual's credentials, which as a minimum will meet the requirements indicated in Paragraph 1-4 in this Section. Inspector certifications by organizations other than those listed herein will not be acceptable without approval of the AHJ. The AHJ may have additional requirements to those specified herein. It is the responsibility of the testing and inspection agencies to meet local requirements and comply with local procedures.

When fabrication will take place away from the local proximity of the project, Approved Agency will submit a “Request for Approval to Provide Special Inspection of Non-Local Fabrication” form for review and approval by Owner, the RDPRC, and the AHJ prior to subcontracting with an inspection/testing agency in the locale of the fabricating plant.

3-2.02. Perform Inspections and Tests. Be present for and perform continuous or periodic inspections and tests as listed in the SSI for conformance of the work to the AHJ approved Construction Documents. Notify Contractor personnel of their presence and responsibilities. Reference the applicable “Code or Standard Reference” column in the SSI for the minimum level of inspections and testing. When the SSI column titled “Code or Standard Reference” indicates “Manufacturer’s research reports”, inspector will obtain the most current ICBO-ES Report, ICC-ES Legacy Report, ICC-ES Report, or IAPMO UES Evaluation Report (as applicable) prior to the applicable inspection, for the type and brand of products or materials being inspected.

Provide additional inspections and testing as necessary to determine compliance with the Construction Documents. Perform special inspections in a timely manner to avoid delay of work.

The Approved Agency shall be responsible to insure that any non-local inspection/testing agency fully complies with this Section and the SSI.

3-2.03. Defective Work. Immediately notify Contractor of the need for corrective action when work does not conform to Construction Documents.

3-2.04. Uncorrected Defective Work. Notify the AHJ and RDPRC when deficiencies have not been corrected. Notice will be made prior to the completion of that phase of the work.

3-2.05. Interim Inspection Reports. Furnish interim inspection reports to the AHJ, the RDPRC, Contractor, Engineer, and Owner during the progress of the work. Frequency of reports will be as established in the SSI. Reports will indicate that work inspected was done in conformance to the approved Construction Documents, or that the work was defective, as applicable.

Special inspection reports and test results will include, but not be limited to, the following:

Project name and address.

Permit number.

Special Inspection Agency name, address, and phone number.

Unique identification of the report and of each page.

Date and time of inspection.

Description of inspections or tests performed, including item description and location (reference grid lines, floors, elevations, etc.). Identify approved agencies employed to carry out tests.

Identification of test/inspection equipment used.

Statement noting that the work, material, and/or product conforms or does not conform to the construction document requirements. Describe defective items.

Name and signature of Contractor's representative who was notified of work, material, and/or products that do not meet the construction document requirements.

Name and signature of Special Inspector and/or testing agency representative performing the work.

3-2.06. Report of Defective Work. Each agent will maintain a log that identifies work that does not meet the requirements of the construction documents. Include:

Description and exact location.

Reference to applicable drawings and specifications.

Reference to original inspection/test report and subsequent dates of re-inspection/retesting.

Name and title of each individual notified and method of notification.

How defective items were resolved or unresolved, as applicable.

Itemized changes authorized by the RDPRC and AHJ if not included in a defective item.

3-2.07. Submittal Schedule. Documentation of reports, test results, and non-compliant work will be submitted at the frequency indicated in the SSI.

3-2.08. Final Report of Special Inspections. Each agent listed in the SSI shall submit a final report to the Approved Agency documenting the performed special inspections and the correction of any discrepancies noted. The Approved Agency shall cumulate the reports and submit a comprehensive final report at a point in time as agreed upon by the permit applicant and the AHJ prior to the start of work.

3-3. STRUCTURAL OBSERVATION. Owner, or RDPRC on Owner's behalf, shall employ a RDP to perform Structural Observation. Prior to the commencement of observations, the structural observer shall submit to the AHJ a written statement identifying the frequency and extent of structural observations. Structural observations may be made periodically as determined by the Registered Design Professional.

At the conclusion of the work requiring observation, the structural observer shall submit to the AHJ a written statement that the site visits have been made and identify any reported deficiencies which, to the best of the structural observer's knowledge, have not been resolved.

Statement of Special Inspections

Project:
Project Address:
Permit Applicant:
Applicant Address:
Owner:
Owner Address:

Registered Design Professional in Responsible Charge (RDPRC) :

Discipline	Name	License Number	Expiration Date
Structural Engineer			
Geotechnical Engineer			
Mechanical Engineer			
Electrical Engineer			

This Statement of Special Inspections includes a *Schedule of Special Inspections* applicable to the above referenced project as well as the identity of the individuals, agencies, or firms intended to be retained for conducting these inspections.

The Special Inspector(s) shall keep records of all inspections and shall furnish interim inspection reports to the Authority Having Jurisdiction (AHJ) and to the Registered Design Professional in Responsible Charge (RDPRC). Discrepancies shall be brought to the immediate attention of the Contractor for correction. If the discrepancies are not corrected, the discrepancies shall be brought to the attention of the AHJ and the RDPRC prior to completion of that phase of work. A *Final Report of Special Inspections* documenting required special inspections and correction of any discrepancies noted in the inspections shall be submitted by each agent.

The Special Inspection program does not relieve the Contractor of the responsibility to comply with the Contract Documents. Jobsite safety and means and methods of construction are solely the responsibility of the Contractor.

Inspection work shall be performed in accordance with the following codes and standards. Unless otherwise indicated within the Statement of Special Inspections, the applicable edition for all codes and standards shall be as follows.

Work	In Accordance With
Building Code	Florida Building Code, 6th Edition (2017) and 2015 International Building Code (IBC) amendments
Seismic Criteria for Nonstructural Components	ASCE 7-10
Standard Tests and Practices	Listed American Society for Testing and Materials (ASTM) specifications
Concrete	ACI 318-14 and ACI 350-06
Masonry	ACI 530-13 and ACI 530.1-13
Structural Steel	AISC 360-10 and AISC 341-10
Structural steel welding	AWS D1.1 Structural Welding Code - Steel
Aluminum welding	AWS D1.2 Structural Welding Code – Aluminum
Sheet steel welding	AWS D1.3 Structural Welding Code – Sheet Steel

Work	In Accordance With
Structural steel bolting	Research Council on Structural Connections Specification for Structural Joints Using High Strength Bolts, December 31, 2009
Intumescent Fire-Resistive Coating	Association of the Wall and Ceiling Industry (AWCI) Technical Manual 12-B, Second Edition; Standard Practice for the Testing and Inspection of Field Applied Thin Film Intumescent Fire-Resistive Materials; an Annotated Guide

RDPRC - Structural	RDPRC - Civil/Geotechnical	RDPRC - Mechanical
RDPRC – Electrical		

Owner's Acknowledgement:

Signature Date

Acceptance by Authority Having Jurisdiction:

Signature Date

Permit No.

Frequency of interim report submittals to AHJ:

☐ 1 week ☐ 2 weeks ☐ Monthly ☐ Bi-Monthly ☐ At Completion ☐ Per attached Schedule

Statement of Special Inspections
(Schedule of Inspections)

The attached tables as listed below define the applicable Special Inspections and Procedures.

Table 1 of 9	Geotechnical Special Inspections
Table 2 of 9	Structural Special Inspections
Table 3 of 9	NOT USED
Table 4 of 9	Inspections for Special Cases
Table 5 of 9	Testing for Special Inspections
Table 6 of 9	NOT USED
Table 7 of 9	NOT USED
Table 8 of 9	Special Inspections for Wind Resistance
Table 9 of 9	Inspection Agents

The nominal design wind speed, V_{asd}, for the project is **155** mph (3 second gust) and the wind exposure category is D.

Schedule of Special Inspections - Table 1 of 9 (Geotechnical Special Inspections)						
	Inspection					
	Building Code Reference	Code or Standard Reference	Frequency		Remarks	Inspection Agent No. (see Table 9)
System or Material			Continuous	Periodic		
Soils						
Verify material below foundation is adequate to achieve design bearing capacity, free of loose, deleterious or foreign material.	1705.6	Geotechnical Report		**X** (foundation excavation complete)		
Verify excavations are extended to proper depth, proper size and material.	1705.6	Geotechnical Report		**X** (foundation excavation complete)		
Prior to placement of controlled fill, inspect subgrade and verify site is properly prepared.	1705.6	Geotechnical Report		**X** (prior to placement of fill)		
Perform classification and testing of compacted fill material.	1705.6	Geotechnical Report		**X** (during placement of fill)		
Verify materials, densities, and lift thicknesses during placement and compaction of controlled fill for foundations.	1705.6	Geotechnical Report	**X**		Note the exception of Article 1705.6.	

Schedule of Special Inspections - Table 2 of 9 (Structural Special Inspections)						
	Inspection					
	Building Code Reference	Code or Standard Reference	Frequency		Remarks	Inspection Agent No. (see Table 9)
System or Material			Continuous	Periodic		
Structural Load-Bearing Members Fabricated in a Shop						
If registered and approved by the AHJ to perform work without special inspection, submit "Fabricator's Certificate of Compliance" at the completion of work that fabricated items were constructed in accordance with the approved construction documents.	1704.2.5.1 1704.5 1705.10			**X** (at end of fabrication)		N/A
Concrete (inspections not required for nonstructural concrete slabs supported directly on the ground)						
Reinforcing steel and prestressing tendon condition (free of oil, dirt and loose rust and that properly coated and/or sheathed) and placement. Verify size, spacing, bar clearances, cover, and adequate support to prevent displacement during concrete placement. Verify lap splices, mechanical splices, and embedment lengths. Verify dowels for work above are properly aligned and spaced to match other work.	1705.3	ACI 318 (Ch. 20) ACI 318 (25.2-25.3) ACI 318 (26.6.1-26.6.3		**X** (prior to closing of forms or delivery of concrete, for each placement)		
Cast-in-place anchor bolts prior to and during placement of concrete.	1705.3	ACI 318 (17.8.2)	**X**		All bolts visually inspected to verify anchor diameter, location, and embedment length.	
Verify use of approved mix design(s).	1705.3 1904.1	ACI 318 (Ch. 19) ACI 318 (26.4.3-26.4.4)		**X**	RDPRC to approve contractor's proposed mix design prior to construction. Inspector to verify from concrete delivery ticket that the appropriate mix has been provided prior to placement.	

Schedule of Special Inspections - Table 2 of 9 (Structural Special Inspections)						
	Inspection					
	Building Code Reference	Code or Standard Reference	Frequency		Remarks	Inspection Agent No. (see Table 9)
System or Material			Continuous	Periodic		
Formwork shape, location, and dimensions of the concrete member being formed, construction joints properly prepared.	1705.3	ACI 318 (26.11.1.2(b)		**X** (prior to delivery of concrete for each placement)		
Prior to concrete placement, fabricate specimens for strength tests, perform slump and air content test, and determine the temperature of the concrete.	1705.3	ASTM C31 ASTM C172 ACI 318 (26.12)		**X**	Sampling and testing frequency shall be as indicated in the cast-in-place concrete specification.	
Concrete placement.	1705.3	ACI 318 (26.5.2)	**X**		Verify that water added at the site does not exceed that allowed by the mix design. Verify conveying, depositing, and consolidation of concrete. Observe placement procedures for evidence of segregation, possible cold joints, displacement of reinforcing or forms, and proper support of embedded items, anchor bolts, etc.	
Concrete curing – maintain temperature and techniques.	1705.3	ACI 318 (26.5.3-26.5.5)		**X** (during hot, cold, and windy conditions)	For wet-curing, check at the beginning of each day during 7 day curing period	
Verification of in-situ concrete strength prior to removal of forms and shores from elevated beams and slabs.	1705.3	ACI 318 (26.11.2)		**X** (prior to form or shore removal)		
Verification of in-situ concrete strength prior to backfilling against walls.				**X** (prior to backfilling operations)		

Schedule of Special Inspections - Table 2 of 9 (Structural Special Inspections)						
	Inspection					
	Building Code Reference	Code or Standard Reference	Frequency		Remarks	Inspection Agent No. (see Table 9)
System or Material			Continuous	Periodic		
Steel						
Material verification of high strength bolts: Identification markings to conform to specified ASTM standards.	1705.2.1	Applicable ASTM material specifications AISC 360 (A3.3) AISC 360 (N3)		**X** (3 bolts from each lot)	Verified at jobsite.	
Material verification of high strength bolts: Manufacturer's certificate of compliance.	1705.2.1	AISC 360 (A3.3) AISC 360 (N3)		**X** (each lot)		
Material verification of structural steel: Identification markings to conform to specified ASTM standards.	1705.2.1 2203.1	AISC 360 (A3.1) AISC 360 (N3)		**X** (3 pieces from each lot)	Verified at fabricator's shop prior to cutting.	
Material verification of structural steel: Certified mill test reports.	1705.2.1 2203.1	AISC 360 (A3.1) AISC 360 (N3)		**X** (each mill order)		
Material verification of anchor rods and threaded rods: Manufacturer's certified test reports.	1705.2.1	AISC 360 (A3.4) AISC 360 (N3)		**X** (each lot)		
Material verification of welding consumables: Identification markings to conform to specified AWS standards.	1705.2.1	AISC 360 (A3.5) AISC 360 (N3) AWS A5 documents		**X** (3 rods from each lot)	Verified at fabricator's shop and at jobsite.	
Material verification of welding consumables: Manufacturer's certificate of compliance.	1705.2.1	AISC 360 (A3.5) AISC 360 (N3) AWS D1.1 (6.2)		**X** (each lot)		
Verify use of proper WPS's.	1705.2.1	AISC 360 (N3) AWS D1.1 (6.3)		**X** (prior to start of work)	Obtain copy of welding procedure specifications.	

Schedule of Special Inspections - Table 2 of 9 (Structural Special Inspections)						
	Inspection					
			Frequency			
System or Material	**Building Code Reference**	**Code or Standard Reference**	**Continuous**	**Periodic**	**Remarks**	**Inspection Agent No.** (see Table 9)
Verify welder qualifications.	1705.2.1	AISC 360 (N3) AWS D1.1 (6.4)		**X** (prior to start of each welder's work)	Obtain copy of qualification records.	
Complete and partial penetration groove welds.	1705.2.1	AISC 360 (N5.4) AWS D1.1 (Section 6)	**X**		Inspect pre-heat, post-heat and surface preparation between passes.	
Multipass fillet welds.	1705.2.1	AISC 360 (N5.4) AWS D1.1 (Section 6)	**X**		Inspect pre-heat, post-heat and surface preparation between passes.	
Single pass fillet welds greater than 5/16".	1705.2.1	AISC 360 (N5.4) AWS D1.1 (Section 6)	**X**			
Plug and slot welds.	1705.2.1	AISC 360 (N5.4) AWS D1.1 (Section 6)	**X**			
Single pass fillet welds less than or equal to 5/16".	1705.2.1	AISC 360 (N5.4) AWS D1.1 (Section 6)		**X** (observe once daily for each welder and visually inspect all welds at the completion of each weld)		

Schedule of Special Inspections - Table 2 of 9 (Structural Special Inspections)						
	Inspection					
			Frequency			
System or Material	**Building Code Reference**	**Code or Standard Reference**	**Continuous**	**Periodic**	**Remarks**	**Inspection Agent No.** (see Table 9)
Welding stair and railing systems.	1705.2.1	AWS D1.1 (Section 6.9)		**X** (observe once daily for each welder and visually inspect all welds at the completion of each weld)	Welding of the railing system required only at the base of cantilevered rail posts.	
Observe high strength bolt preinstallation testing and calibration procedures.	1705.2.1	AISC 360 (N5.6) RCSC Specification for Structural Joints Using High-Strength Bolts (Section 7)		**X** (3 complete fastener assemblies of each combination of diameter, length, grade, and lot to be used in the work)	Test in a tension calibrator at the site. Required pretension is equal to or greater than 1.05 times that specified for installation. Verify accuracy of the tension calibrator has been confirmed through calibration within previous 12 months.	
Snug-tight high strength bolt installation: All connections visually inspected. Connected materials drawn together and properly snugged.	1705.2.1	AISC 360 (M2.5) AISC 360 (N5.6) RCSC Specification for Structural Joints Using High-Strength Bolts (Section 9)		**X** (observe once daily for each bolting crew and at completion of assembly installation)		

Schedule of Special Inspections - Table 2 of 9 (Structural Special Inspections)						
	Inspection					
	Building Code Reference	Code or Standard Reference	Frequency		Remarks	Inspection Agent No. (see Table 9)
System or Material			Continuous	Periodic		
Pretensioned high strength bolt installation using turn-of-the-nut method with match marking, direct tension indicator method, or twist-off type tension control bolt method: Verify installation procedure, all plies drawn together and properly snugged, visually inspect all connections. Verify that splines have separated from tension control bolts.	1705.2.1	AISC 360 (M2.5) AISC 360 (N5.6) RCSC Specification for Structural Joints Using High-Strength Bolts (Section 9)		**X** (observe once daily for each bolting crew and each assembly installation as noted in Remarks)	Turn-of-the-nut method with match marking: after pretensioning. Direct tension indicators: feeler gauge used after snugging and after pretensioning. Twist-off type tension control bolt: after pretensioning.	
Pretensioned high strength bolt installation using turn-of-the-nut method without match marking or calibrated wrench method: Verify installation procedure, all plies drawn together and properly snugged, visually inspect all connections.	1705.2.1	AISC 360 (M2.5) AISC 360 (N5.6) RCSC Specification for Structural Joints Using High-Strength Bolts (Section 9)	**X**			
Verification of frame joint details including application, component locations, bracing, and stiffening, proper application of joint details at each connection.	1705.2.1	AISC 360 (N5.7)		**X** (at 50% complete and 100% complete, for each structure)		
Proprietary moment resisting frame connection systems.	1703.4.2				Refer to welding and high strength bolting requirements.	

Schedule of Special Inspections - Table 2 of 9 (Structural Special Inspections)						
	Inspection					
	Building Code Reference	Code or Standard Reference	Frequency		Remarks	Inspection Agent No. (see Table 9)
System or Material			Continuous	Periodic		
Post-Installed Anchors – Expansion and Undercut Anchors into Concrete						
Verify anchor type, size, dimensions, location, spacing, edge distance, drill bit type, drill bit diameter, embedment depth, tightening torque, hole dimensions, hole cleaning procedure, concrete compressive strength, concrete thickness, and adherence to the manufacturer's installation instructions.	1705.3 1703.4.2 1705.1.1	Manufacturer's research report		**X**	Continuous inspection is required if mandated by manufacturer's research report.	
Post-Installed Anchors – Adhesive Anchors into Concrete						
Adhesive anchors installed in overhead, upwardly inclined, or horizontal positions: Verify anchor type, size, dimensions, location, spacing, edge distance, embedment depth, tightening torque, hole dimensions, hole cleaning procedure, concrete compressive strength, concrete thickness, adhesive identification, adhesive expiration date, and adherence to the manufacturer's installation instructions.	1705.3 1703.4.2 1705.1.1	Manufacturer's research report	**X**			

Schedule of Special Inspections - Table 2 of 9 (Structural Special Inspections)						
	Inspection					
	Building Code Reference	Code or Standard Reference	Frequency		Remarks	Inspection Agent No. (see Table 9)
System or Material			Continuous	Periodic		
Adhesive anchors installed in other positions: Verify anchor type, size, dimensions, location, spacing, edge distance, embedment depth, tightening torque, hole dimensions, hole cleaning procedure, concrete compressive strength, concrete thickness, adhesive identification, adhesive expiration date, and adherence to the manufacturer's installation instructions.	1705.3 1703.4.2 1705.1.1	Manufacturer's research report		**X**	Inspection required at start of job for each type and size of adhesive anchor by construction personnel on site. Subsequent installations of the same anchor type and size by the same personnel shall be inspected periodically, unless continuous inspections are mandated by the manufacturer's research report. Any change in the anchor product being installed or the personnel performing the installation shall require another initial inspection.	
Aluminum						
Material verification of structural aluminum: Certified mill test reports.	1705.1.1			**X** (each mill order)		
Material verification of bolts: Manufacturer's certified test reports.	1705.1.1			**X** (each lot)		
Material verification of weld filler metals.	1705.1.1	AWS D1.2 (Section 5)		**X** (3 rods from each lot)	Checked at fabricator's shop and at jobsite.	
Verify use of proper WPS's.	1705.1.1	AWS D1.2 (Section 5)		**X** (prior to start of work)	Obtain copy of welding procedure specifications.	
Verify welder qualifications.	1705.1.1	AWS D1.2 (Section 5)		**X** (prior to start of each welder's work)	Obtain copy of qualification records.	
Complete and partial penetration groove welds.	1705.1.1	AWS D1.2 (Section 5)	**X**			

Schedule of Special Inspections - Table 2 of 9 (Structural Special Inspections)						
	Inspection					
			Frequency			
System or Material	**Building Code Reference**	**Code or Standard Reference**	**Continuous**	**Periodic**	**Remarks**	**Inspection Agent No.** (see Table 9)
Multipass fillet welds.	1705.1.1	AWS D1.2 (Section 5)	**X**			
Single pass fillet welds.	1705.1.1	AWS D1.2 (Section 5)		**X** (observe once daily for each welder and visually inspect all welds at the completion of each weld)		

Schedule of Special Inspections - Table 3 of 9 (Architectural Special Inspections)						
	Inspection					
	Building Code Reference	Code or Standard Reference	Frequency			
System or Material			Continuous	Periodic	Remarks	Inspection Agent No. (see Table 9)
NOT USED						

Schedule of Special Inspections - Table 4 of 9 (Inspections for Special Cases)						
	Inspection					
	Building Code Reference	Code or Standard Reference	Frequency		Remarks	Inspection Agent No. (see Table 9)
System or Material			Continuous	Periodic		
Pre-Engineered Structures						
Fabrication and erection	1705.1.1				Refer to Table 2 for fabricator, welding, and high strength bolting special inspection requirements	
Welded Steel Tanks						
Fabrication and erection	1705.1.1	AWWA D100, Section 11 API 650, 7.3 API 620, Section 5		**X** (per Table 2)	In addition to periodic inspection, all joints visually inspected prior to coating application. Refer to Table 2 for fabricator, welding, and high strength bolting special inspection requirements	

Schedule of Special Inspections - Table 5 of 9 (Testing for Special Inspections)					
	Inspection				
System or Material	**Building Code Reference**	**Code or Standard Reference**	**Frequency**	**Remarks**	**Inspection Agent No.** (see Table 9)
Geotechnical					
Classification of controlled fill material.	1705.6	ASTM D2488	One per stratum of on-site excavated material. One per common supply of off-site material.	Per Geotechnical Report and excavation and fill for structures specification.	
Foundation subgrade, in-place density.	1705.6	ASTM D2922 ASTM D1556 or ASTM D2167 (10% of tests to be ASTM D1556 or ASTM D2167)	One test per 1,000 SY, or as required in the excavation and fill for structures specification. Min one per foundation for foundations over 10 SY.	Per Geotechnical Report and excavation and fill for structures specification.	
Controlled fill beneath foundations, in-place density.	1705.6	ASTM D2922 ASTM D1556 or ASTM D2167 (10% of tests to be ASTM D1556 or ASTM D2167)	One test per 200 CY, or as required in the excavation and fill for structures specification. Min one per foundation for foundations over 10 SY.	Per Geotechnical Report and excavation and fill for structures specification.	
Concrete					
Concrete strength.	1705.3	ASTM C31 ASTM C39 ASTM C172	See concrete specification	See concrete specification for quantity of cylinders.	

Schedule of Special Inspections - Table 5 of 9 (Testing for Special Inspections)					
	Inspection				
System or Material	**Building Code Reference**	**Code or Standard Reference**	**Frequency**	**Remarks**	**Inspection Agent No.** (see Table 9)
Concrete slump, air content, temperature, unit weight, water soluble chloride ion, shrinkage.	1705.3	ASTM C31 ASTM C138 ASTM C143 ASTM C157 ASTM C172 ASTM C231 ASTM C1064 ASTM C1218	See concrete specification		
Steel					
Liquid penetrant (PT), magnetic particle (MT), radiographic (RT) and ultrasonic (UT) testing of welds.	1705.2	PT – AWS D1.1 (6.10 & 6.14.5) MT - AWS D1.1 (6.10 & 6.14.4) RT – AWS D1.1 (6.12 & 6.14.1) UT - AWS D1.1 (6.13 & 6.14.3)		**Where referenced in the Drawings**	
Aluminum					
Liquid penetrant (PT) and radiographic (RT) testing of welds.		PT - AWS D1.2 (5.7.5) RT - AWS D1.2 (5.10 & 5.15)		**Where referenced in the Drawings**	
Welded Steel Tanks					
Radiographic testing (RT) of welds.		AWWA D100 (11.5 & 11.6) API 650 (8.1) API 620 (5.15.1)	At shell joints - number and spacing per the standard		

Schedule of Special Inspections - Table 6 of 9 (Special Inspections for Seismic Resistance)
NOT USED

Schedule of Special Inspections - Table 7 of 9 (Testing for Seismic Resistance)
NOT USED

Schedule of Special Inspections - Table 8 of 9 (Special Inspections for Wind Resistance)						
	Inspection					
			Frequency			
System or Material	**Building Code Reference**	**Code or Standard Reference**	**Continuous**	**Periodic**	**Remarks**	**Inspection Agent No.** (See Table 9)
Roof covering, roof deck, and roof framing connections.	1705.11.3			**X** (after installation for each structure)		
Exterior wall covering and wall connections to roof and floor diaphragms and framing.	1705.11.3			**X** (after installation for each structure)		

Schedule of Special Inspections - Table 9 of 9 (Inspection Agents)					
AGENT NAME	**LICENSE NO.**	**FIRM**	**ADDRESS**	**EMAIL**	**TELEPHONE NO.**
1.					( )
2.					( )
3.					( )
4.					( )
5.					( )
6.					( )
7.					( )
8.					( )
9.					( )
10.					( )

Request for Approval of Special Inspector

Project:
Project Address:
Name of Inspection/Testing Agency:
Address:
Phone Number:
Testing agency manager/supervisor responsible for this project:

Special Inspector Name:

Special Inspector Signature: _____
(as it will appear on reports)

This individual is qualified to inspect:

[ ] Verification of Soils
[ ] Earth Retaining Structure
[ ] Excavation and Filling
[ ] Piling
[ ] Drilled Piers
[ ] Testing of Concrete
[ ] Placement of Concrete
[ ] Placement of Shotcrete
[ ] Placement of Rebar
[ ] Prestressing Concrete
[ ] High Strength Bolting
[ ] Structural Welding
[ ] Steel Frame Inspection
[ ] Structural Masonry
[ ] Erection of Precast
[ ] Inspection of Fabricators
[ ] Precast Fabrication
[ ] Structural Steel
[ ] Metal Building
[ ] EIFS Inspection
[ ] Smoke Control
[ ] Seismic Resistance
[ ] Sprayed Fireproofing
[ ] Architectural Systems
[ ] Mechanical Systems
[ ] Electrical Systems

Current certifications and/or professional licenses retained by the individual:

[ ] Professional Engineer
[ ] Geotechnical Engineer
[ ] Structural Engineer
[ ] Registered Architect
[ ] Registered Geologist
[ ] EI/EIT (min. of 1 yr. related experience)
[ ] GIT (min. of 1 yr. related experience)
[ ] ACI Concrete Field Testing Technician Grade 1
[ ] ACI Concrete Construction Inspector
[ ] ACI Laboratory Testing Technician, Grade 1 or 2
[ ] ACI Strength Testing Technician
[ ] AWS Certified Welding Inspector
[ ] AWS/AISC Certified Structural Steel Inspector
[ ] ASNT NDT Technician Level II or III
[ ] ICC Building Inspector
[ ] ICC Structural Masonry
[ ] ICC Structural Steel and Welding
[ ] ICC Spray-Applied Fire Proofing
[ ] ICC Prestressed Concrete
[ ] ICC Reinforced Concrete
[ ] ICC Structural Steel and Bolting
[ ] ICC Structural Welding
[ ] NCMA Concrete Masonry Testing Technician
[ ] NICET Concrete Technician Level II, III, or IV
[ ] NICET Soils Technician Level II, III, or IV
[ ] NICET Geotechnical Engineering Technician Level II, III, or IV
[ ] EDI EIFS
[ ] Other _____

Copies of current certifications and/or professional licenses and a resume showing the special inspector's work experience are attached.

I hereby certify that in my judgment the individual is qualified to inspect and/or test the items indicated above.

Special Inspection Agency:

Signed:_____Date:_____
(Testing agency manager/supervisor responsible for this project)

Request for Approval to Provide Special Inspection of Non-Local Fabrication

Project:
Project Address:

Testing / Inspection Agent:
Testing / Inspection Agent Address:
Scope of Testing / Inspections:

We propose to have the following testing agency provide special inspection of fabrication of:

Fabricator name:
Fabricator address:

Name of Testing Agency:
Address:
Phone Number:
Testing agency manager/supervisor responsible for this project:
Primary special inspector for this project:

Copies of the Request for Approval of Special Inspector, resumes, and certifications are attached.

The fabrication inspections to be performed are:

The undersigned hereby acknowledge that they have read, understand and will properly enforce the inspection and testing requirements for the above referenced project, as specified in the Code-Required Special Inspections and Procedures section. Further, the undersigned acknowledge that they have no interest (financial, personal or otherwise) in the performance or management of the above identified Fabricator.

Signature of Primary Special Inspector	Date
Signature of Responsible Agency Manager/Supervisor	Date
Signature of Responsible Manager for Approved Agency employed by the Owner	Date

Contractor's Statement of Responsibility

Each Fabricator, Contractor, or Supplier responsible for the construction or fabrication of a system or component designated in the Statement of Special Inspections shall submit this Statement of Responsibility.

Project:
Contractor's or Supplier's Name:
Address:
License No.:

Description of designated building systems and components included in the Statement of Responsibility:

Acknowledgment of Special Requirements

I hereby acknowledge that I have received, read, and understand the Code Required Special Inspections and Tests program and the Schedule of Special Inspections.

I hereby acknowledge that control will be exercised to obtain conformance with the construction documents approved by the Authority Having Jurisdiction.

_____ _____

Signature Date

_____

Title

Provisions for Quality Control

Procedures for exercising control within the Fabricator's, Contractor's, or Supplier's organization, the method and frequency of reporting and the distribution of reports are attached to this Statement.

Identification and qualifications of the person(s) exercising such control and their position(s) in the organization are attached to this Statement.

Fabricator's Certificate of Compliance

Each approved fabricator that is exempt from Special Inspection of shop fabrication and implementation procedures per the governing building code shall submit this *Fabricator's Certificate of Compliance* at the completion of fabrication.

Project:
Fabricator's Name:
Address:
Certification or Approval Agency:
Certification Number:
Date of Last Audit or Approval:

Description of structural members and assemblies that have been fabricated:

I hereby certify that items described above were fabricated in strict accordance with the approved construction documents.

_____ _____

Signature Date

_____

Title

Attach copies of fabricator's certification or building code evaluation service report and fabricator's quality control manual.

Final Report of Special Inspections

Project:
Project Address:

Testing / Inspection Agent:
Testing / Inspection Agent Address:
Scope of Testing / Inspections:

To the best of my information, knowledge, and belief, the special inspections or testing required for this project, and designated for this Agent in the Statement of Special Inspections submitted for permit, have been completed in accordance with the contract documents. Based upon my personal observations and written reports, it is my judgment that the inspected work was performed, to the best of my knowledge, in accordance with the building department approved design drawings, specifications, approved change orders, and applicable workmanship provisions of the governing building code.

Interim reports submitted prior to this final report and numbered _____ to _____, form a basis for, and are to be considered an integral part of this final report.

The following discrepancies that were outstanding since the last interim report dated
have been corrected:

Items not in conformance, unresolved items or any discrepancies in inspection coverage (i.e., missed inspections, periodic inspections when continuous was required, etc.) are as follows:

Prepared By:

_____

Type or print name

_____

Signature Date

Special Inspector's Seal

(Licensed Professional)

Section 01610

GENERAL EQUIPMENT STIPULATIONS

1. SCOPE. When an equipment specification section in this Contract references this section, the equipment shall conform to the general stipulations set forth in this section, except as otherwise specified in other sections.

2. COORDINATION. Contractor shall coordinate all details of the equipment with other related parts of the Work, including verification that all structures, piping, wiring, and equipment components are compatible. Contractor shall be responsible for all structural and other alterations in the Work required to accommodate equipment differing in dimensions or other characteristics from that contemplated in the Drawings or Specifications.

3. MANUFACTURER'S EXPERIENCE. Unless specifically named in the Specifications, a manufacturer shall have furnished equipment of the type and size specified which has been in successful operation for not less than the past 5 years.

4. WORKMANSHIP AND MATERIALS. Contractor shall guarantee all equipment against faulty or inadequate design, improper assembly or erection, defective workmanship or materials, and leakage, breakage, or other failure. Materials shall be suitable for service conditions.

All equipment shall be designed, fabricated, and assembled in accordance with recognized and acceptable engineering and shop practice. Individual parts shall be manufactured to standard sizes and thicknesses so that repair parts, furnished at any time, can be installed in the field. Like parts of duplicate units shall be interchangeable. Equipment shall not have been in service at any time prior to delivery, except as required by tests.

Except where otherwise specified, structural and miscellaneous fabricated steel used in equipment shall conform to AISC standards. All structural members shall be designed for shock or vibratory loads. Unless otherwise specified, all steel which will be submerged, all or in part, during normal operation of the equipment shall be at least 1/4 inch thick. When dissimilar metal components are used, consideration shall be given to prevention of galvanic corrosion.

5. STRUCTURAL DESIGN REQUIREMENTS. All equipment, including non-structural components and non-building structures as defined in ASCE 7, and their anchorage, shall be designed and detailed in accordance with the Meteorological and Seismic Design Criteria section.

6. LUBRICATION. Equipment shall be adequately lubricated by systems which require attention no more frequently than weekly during continuous operation.

Lubrication systems shall not require attention during startup or shutdown and shall not waste lubricants.

Lubricants of the types recommended by the equipment manufacturer shall be provided in sufficient quantities to fill all lubricant reservoirs and to replace all consumption during testing, startup, and operation prior to acceptance of equipment by Owner. Lubricants for equipment where the lubricants may come in contact with water before or during a potable water treatment process or with potable water, shall be food grade lubricants. This includes lubricants for equipment not normally in contact with water, but where accidental leakage of the lubricants may contaminate the water.

Lubrication facilities shall be convenient and accessible. Oil drains and fill openings shall be easily accessible from the normal operating area or platform. Drains shall allow for convenient collection of waste oil in containers from the normal operating area or platform without removing the unit from its normal installed position.

7. ELEVATION. The elevation of the site shall be as indicated in the Meteorological and Seismic Design Criteria section. All equipment furnished shall be designed to meet stipulated conditions and to operate satisfactorily at the specified elevation.

8. ELECTRIC MOTORS. Unless otherwise specified, motors furnished with equipment shall meet the requirements specified in Common Motor Requirements for Process Equipment section or specified in specific equipment sections.

9. DRIVE UNITS. The nominal input horsepower rating of each gear or speed reducer shall be at least equal to the nameplate horsepower of the drive motor. Drive units shall be designed for 24 hour continuous service.

9.01. Gearmotors. The use of gearmotors sharing an integral housing or cutgears into the motor output shaft, or that require removal of lubricant from the gear reducer to change out the motor will not be acceptable.

9.02. Gear Reducers. Each gear reducer shall be a totally enclosed unit with oil or grease lubricated, rolling element, antifriction bearings throughout.

Unless superseded by individual specification requirements each helical, spiral bevel, combination bevel-helical, and worm gear reducers shall have a service factor of at least 1.50 based on the nameplate horsepower of the drive motor. Cycloidal gear reducers shall have a service factor of at least 2.0 based on the nameplate horsepower of the drive motor. Shaft-mounted and flange-mounted gear reducers shall be rated AGMA Class III. Helical gear reducers shall have a gear strength rating to catalog rating of 1.5. Each gear reducer shall be designed

and manufactured in compliance with applicable most current AGMA standards, except the L_{10} bearing life shall be 200, 000 hours.

The thermal horsepower rating of each unit shall equal or exceed the nameplate horsepower of the drive motor. During continuous operation, the maximum sump oil temperature shall not rise more than 100°F above the ambient air temperature in the vicinity of the unit and shall not exceed 200°F.

Each grease lubricated bearing shall be installed in a bearing housing designed to facilitate periodic regreasing of the bearing by means of a manually operated grease gun. Each bearing housing shall be designed to evenly distribute new grease, to properly dispose of old grease, and to prevent overgreasing of the bearing. The use of permanently sealed, grease lubricated bearings will not be acceptable in large sized reducers. In small reducers, similar to basin equipment, permanently sealed grease lubricated bearings rated L_{10} 200,000 hour life may be provided at the manufacturer's option. An internal or external oil pump and appurtenances shall be provided if required to properly lubricate oil lubricated bearings. A dipstick or a sight glass arranged to permit visual inspection of lubricant level shall be provided on each unit.

Gear reducers which require the removal of parts or the periodic disassembly of the unit for cleaning and manual regreasing of bearings will not be acceptable.

Certification shall be furnished by the gear reducer manufacturer indicating that the intended application of each unit has been reviewed in detail by the manufacturer and that the unit provided is fully compatible with the conditions of installation and service.

9.03. Adjustable Speed Drives. Each mechanical adjustable speed drive shall have a service factor of at least 1.75 at maximum speed based on the nameplate horsepower of the drive motor. A spare belt shall be provided with each adjustable speed drive unit employing a belt for speed change. Unless specifically permitted by the detailed equipment specifications, bracket type mounting will not be acceptable for variable speed drives.

9.04. V-Belt Drives. Each V-belt drive shall include a sliding base or other suitable tension adjustment. V-belt drives shall have a service factor of at least 1.75 at maximum speed based on the nameplate horsepower of the drive motor.

10. SAFETY GUARDS. All belt or chain drives, fan blades, couplings, and other moving or rotating parts shall be covered on all sides by a safety guard. Safety guards shall be fabricated from 16 USS gage thick or thicker galvanized, aluminum-clad sheet steel, or stainless sheet steel or from 1/2 inch mesh galvanized expanded metal, or pultrusion molded UV resistant materials. Each safety guard shall be reinforced or shaped to provide suitable strength to prevent vibration and deflection and shall comply with OSHA. Each guard shall be

designed for easy installation and removal. All necessary supports and accessories shall be provided for each guard. Supports and accessories, including bolts, shall be galvanized. All safety guards in outdoor locations shall be designed to prevent the entrance of rain and dripping water.

11. ANCHOR BOLTS. Equipment suppliers shall design and detail suitable anchor bolts for each item of equipment. Anchor bolts shall be designed for all operating conditions of the equipment, including wind and seismic loadings when applicable. Wind and seismic loads shall be as indicated in the Meteorological and Seismic Design Criteria section.

Requirements for anchor bolt type, material, and minimum diameter shall be as indicated in the Anchorage in Concrete and Masonry section.

Anchor bolts, together with templates or setting drawings, shall be delivered sufficiently early to permit setting the anchor bolts when the structural concrete or masonry grout is placed.

Unless otherwise indicated or specified, anchor bolts for items of equipment mounted on baseplates shall be long enough to permit 1-1/2 inches of grout beneath the baseplate and to provide adequate anchorage into structural concrete.

12. EQUIPMENT BASES. Unless otherwise indicated or specified, all equipment shall be installed on concrete bases at least 6 inches high. Cast iron or welded steel baseplates shall be provided for pumps, compressors, and other equipment. Each unit and its drive assembly shall be supported on a single baseplate of neat design. Baseplates shall have pads for anchoring all components, and adequate grout holes. Baseplates for pumps shall have a means for collecting leakage and a threaded drain connection. Baseplates shall be anchored to the concrete base with suitable anchor bolts and the space beneath filled with grout as specified in the Grouting section.

13. SPECIAL TOOLS AND ACCESSORIES. Equipment requiring periodic repair and adjustment shall be furnished complete with all special tools, instruments, and accessories required for proper maintenance. Equipment requiring special devices for lifting or handling shall be furnished complete with those devices.

14. SHOP PAINTING. All iron and steel surfaces of the equipment shall be protected with suitable protective coatings applied in the shop. Surfaces of the equipment that will be inaccessible after assembly shall be protected for the life of the equipment. Coatings shall be suitable for the environment where the equipment is installed. Exposed surfaces shall be finished, thoroughly cleaned, and filled as necessary to provide a smooth, uniform base for painting. Electric motors, speed reducers, starters, and other self-contained or enclosed

components shall be shop primed or finished with an epoxy or polyurethane enamel or universal type primer suitable for top coating in the field with a universal primer and aliphatic polyurethane system.

Surfaces to be coated after installation shall be prepared for painting as recommended by the paint manufacturer for the intended service, and then shop painted with one or more coats of a universal primer.

Machined, polished, and nonferrous surfaces which are not to be painted shall be coated with rust-preventive compound as recommended by the equipment manufacturer.

15. PREPARATION FOR SHIPMENT. Equipment shall be prepared for shipment as specified in the Product Delivery Requirements section.

16. STORAGE. Handling and storage of equipment shall be as specified in the Product Storage and Handling Requirements section.

17. INSTALLATION AND OPERATION. Installation and operation shall be as specified in respective equipment sections and the Startup Requirements section.

18. OBSERVATION OF PERFORMANCE TESTS. Where the Specifications require the presence of Engineer, initial tests shall be observed or witnessed by Engineer. Owner shall be reimbursed by Contractor for all costs of subsequent visits by Engineer to witness or observe incomplete tests, retesting, or subsequent tests.

19. PROGRAMMING SOFTWARE. Programming software shall be provided for any equipment which includes a programmable logic controller (PLC) or other digital controller that is user-programmable. The software shall be suitable for loading and running on a laptop personal computer operating with a Windows-based operating system. A copy of the manufacturer's original operating logic program shall be provided for use in maintaining and troubleshooting the equipment. Where multiple pieces of equipment, from the same or different vendors, use the same programming software, only one copy of the software need be provided.

End of Section

Section 01612

PRODUCT DELIVERY REQUIREMENTS

1. SCOPE. This section covers packaging and shipping of materials and equipment.

2. PREPARATION FOR SHIPMENT. All equipment shall be suitably packaged to facilitate handling and to protect against damage during transit and storage. All equipment shall be boxed, crated, or otherwise completely enclosed and protected during shipment, handling, and storage. All equipment shall be protected from exposure to the elements and shall be kept dry at all times.

Painted and coated surfaces shall be protected against impact, abrasion, discoloration, and other damage. Painted and coated surfaces which are damaged prior to acceptance of equipment shall be repainted to the satisfaction of Engineer.

Grease and lubricating oil shall be applied to all bearings and similar items.

3. SHIPPING. Before shipping each item of equipment shall be tagged or marked as identified in the delivery schedule or on the Shop Drawings. Complete packing lists and bills of material shall be included with each shipment.

End of Section

Section 01614

PRODUCT STORAGE AND HANDLING REQUIREMENTS

1. SCOPE. This section covers delivery, storage, and handling of materials and equipment.

2. DELIVERY. Contractor shall bear the responsibility for delivery of equipment, spare parts, special tools, and materials to the site and shall comply with the requirements specified herein and shall provide required information concerning the shipment and delivery of the materials specified in this Contract. These requirements also apply to any subsuppliers making direct shipments to the Site.

Contractor shall, either directly or through contractual arrangements with others, accept responsibility for the safe handling and protection of the equipment and materials furnished under this Contract before and after receipt at the port of entry. Acceptance of the equipment shall be made after it is installed, tested, placed in operation and found to comply with all the specified requirements.

All items shall be checked against packing lists immediately on delivery to the site for damage and for shortages. Damage and shortages shall be remedied with the minimum of delay.

Delivery of portions of the equipment in several individual shipments shall be subject to review of Engineer before shipment. When permitted, all such partial shipments shall be plainly marked to identify, to permit easy accumulation, and to facilitate eventual installation.

3. STORAGE. Upon delivery, all equipment and materials shall immediately be stored and protected until installed in the Work.

Stacked items shall be suitably protected from damage by spacers or load distributing supports that are safely arranged. No metalwork (miscellaneous steel shapes and reinforcing steel) shall be stored directly on the ground. Masonry products shall be handled and stored in a manner to hold breakage, chipping, cracking, and spalling to a minimum. Cement, lime, and similar products shall be stored off the ground on pallets and shall be covered and kept completely dry at all times. Pipe, fittings, and valves may be stored out of doors, but must be placed on wooden blocking. PVC pipe, geomembranes, plastic liner, and other plastic materials shall be stored off the ground on pallets and protected from direct sunlight.

Pumps, motors, electrical equipment, and all equipment with antifriction or sleeve bearings shall be stored in weathertight structures maintained at a temperature above 60°F. Electrical equipment, controls, and insulation shall be protected against moisture and water damage. All space heaters furnished in equipment shall be connected and operated continuously.

Equipment having moving parts, such as gears, bearings, and seals, shall be stored fully lubricated with oil, grease, etc., unless otherwise instructed by the manufacturer. Manufacturer's storage instructions shall be carefully followed by Contractor.

When required by the equipment manufacturer, moving parts shall be rotated a minimum of twice a month to ensure proper lubrication and to avoid metal to metal "welding". Upon installation of the equipment, Contractor shall, at the discretion of Engineer, start the equipment at one-half load for an adequate period of time to ensure that the equipment does not deteriorate from lack of use.

When required by the equipment manufacturer, lubricants shall be changed upon completion of installation and as frequently as required thereafter during the period between installation and acceptance. New lubricants shall be put into the equipment by Contractor at the time of acceptance.

Equipment and materials shall not show any pitting, rust, decay, or other deleterious effects of storage when installed in the Work.

In addition to the protection specified for prolonged storage, the packaging of spare units and spare parts shall be for export packing and shall be suitable for long-term storage in a damp location. Each spare item shall be packed separately and shall be completely identified on the outside of the container.

4. HANDLING. Stored items shall be laid out to facilitate their retrieval for use in the Work. Care shall be taken when removing the equipment for use to ensure the precise piece of equipment is removed and that it is handled in a manner that does not damage the equipment.

During handling, carbon steel constructed material including chains, straps, and forks on lifting equipment shall not directly contact any equipment or material constructed of stainless steel. It shall be the Contractor’s responsibility to correct any carbon steel contamination of stainless steel.

End of Section

Section 01615

EQUIPMENT AND VALVE IDENTIFICATION

PART 1 – GENERAL

1-1. SCOPE. This section covers the furnishing and installation of nameplates and tags for identification of equipment, valves, panels, and instruments.

1-2. GENERAL. Except as otherwise specified in equipment, valve, and instrumentation sections, nameplates and tags shall be as specified herein. Nameplates or tags shall be provided for all equipment, valves, operator interfaces, control and electrical panels, cabinets, instruments, and instrument racks that have been named and/or tagged on the Drawings.

1-3. SUBMITTALS. Drawings and data shall be submitted in accordance with the requirements of the Submittals Procedures section for each type of tag provided including materials, colors, sizes, letter sizes, and installation instructions.

PART 2 - PRODUCTS

2-1. EQUIPMENT NUMBER PLATES. All equipment tagged on the drawings, except for submerged equipment shall be provided with number plates bearing the equipment tag number identified on the Drawings. Number plates shall be bevelled, 1/8th inch thick laminated black phenolic plastic engraving stock with white core. Lettering on number plates shall be capitalized block letters ¾ inch high. Number plate height shall be twice the letter height. Number plate length shall be as needed, with suitable margins all around. Lettering shall be placed in one row where practicable; however, where necessary due to excessive length, lettering shall be placed on more than one row and centered.

Number plates shall be attached with stainless steel panhead screws, rivets, or drive screws.

When a number plate cannot be installed due to the physical size, space, or mounting surface geometry of the equipment, the Contractor shall provide a 12 gauge stainless steel tag with engraved or imprinted equipment tag number. Lettering on tags shall be ¼ inch high. Tags shall be rectangular with smooth edges, and shall be fastened to the equipment with stainless steel mechanical fasteners or with a stainless steel chain.

2-2. EQUIPMENT INFORMATION PLATES. Equipment shall be provided with engraved or stamped equipment information plates securely affixed with mechanical fasteners to the equipment in an accessible and visible location. Equipment information plates shall be in addition to the number plates specified. Equipment information plates shall indicate the manufacturer's name, address,

product name, catalog number, serial number, capacity, operating and power characteristics, labels of tested compliances, and any other pertinent design data. Equipment information plates listing the distributing agent only will not be acceptable.

2-3. VALVE AND GATE TAGS.

2-3.01. Temporary Tags. Not Used.

2-3.02. Permanent Tags. All valves and gates, except buried or submerged valves, that have been assigned a number on the Drawings or in the valve or gate schedule, shall be provided with a permanent number plate. Tags shall be permanently attached to valves and gates with stainless steel mechanical fasteners or with stainless steel chains. Numerals shall be ¾ inch high and shall be black baked enamel on an anodized aluminum plate.

All buried valves shall be tagged with a brass plate cast into a 6-inch by 6 inch concrete pad at grade next to the valve box. The valve number shall be engraved in the brass plate with lettering and numerals at least 1 inch high.

2-4. PANEL NAMEPLATES. Nameplates shall be provided on the face of each panel and cabinet. Panel identification nameplates shall be mounted at the top of the panel shall include the panel descriptive name and tag number as indicated on the Drawings, in two or three lines of text. Lettering shall be ¾ inch high.

Nameplates for devices mounted on or in the panel shall be inscribed with the text as indicated on the Drawings. Where nameplate information is not indicated on the Drawings, inscriptions shall be in accordance with information in the supplier's submittal drawings as guided by information in the relevant specification section. Panel device nameplates shall have engraved letters 3/16 inch high.

Nameplate material and size shall be as specified above for equipment number plates. Nameplates shall be secured to the panel with stainless steel panhead screws.

2-5. INSTRUMENT TAGS.

2-5.01. Temporary Tags. Not used.

2-5.02. Permanent Tags. Instruments shall be tagged with the instrument tag number indicated on the Drawings. Tags shall be 12 gauge stainless steel with engraved or imprinted symbols. Lettering on tags shall be ¼ inch high. Tags shall be rectangular with smooth edges, and shall be fastened to the instrument with stainless steel mechanical fasteners or with a stainless steel chain.

PART 3 – EXECUTION. Not used.

End of Section

Section 01620

EQUIPMENT SCHEDULE

1. SCOPE. This section consists of an equipment schedule for items for which a basic level of manufacturer's field services or operation and maintenance manuals are required, but not covered in other sections. When other sections indicate that manufacturer's field services and operation and maintenance manuals are required, the requirements shall be as specified in the other sections.

Specific requirements for manufacturer's field services are covered in the Quality Control section and the equipment specifications.

Specific requirements for operation and maintenance manuals are covered in the Submittals Procedures section and the equipment specifications.

2. SCHEDULE. Manufacturer's field services, including equipment installation checks and training, and operation and maintenance manuals shall be provided for the items of equipment indicated in the following schedule:

Spec Section	Type of Equipment	Mfr's. Field Services	O&M Manual
11150	Submerisble Pumps	X	X
13500	Instrumentation and Control System		X
15650	Refrigeration Systems		X
16150	Adjustable Frequency Drives		X

End of Section

Section 01630

SCHEDULES FOR LIQUIDS PROCESS PIPING

1. SCOPE. This section consists of a schedule of 4 inch and larger pipelines indicating the type of pipe to be used. Pipe materials, installation, testing, and disinfection, when specified, are covered in other sections.

Piping smaller than 4 inches is covered in the various miscellaneous piping sections. Piping for plumbing, heating and air conditioning systems is covered in other sections. Piping to be furnished with equipment is covered in the applicable equipment section.

2. ALTERNATIVE PIPE TYPES. Where more than one type of pipe is indicated in the schedule, the type of pipe material to be installed may be selected by Contractor. The details on the drawings cover only one type of pipe for each line. If a different material is selected by Contractor, all details of connections, jointing, wall fittings, support, anchorage, and harnesses shall be modified as necessary to produce an equivalent design acceptable to Engineer.

3. WALL FITTINGS. A wall pipe or sleeve will be required for all pipe passing through concrete or masonry block walls. Wall fittings and sleeves shall be as indicated on the drawings and as specified in the applicable piping section.

4. SCHEDULE INDEX. Pipe material abbreviations and their applicable specification section number are as indicated:

Abbreviation	Pipe Material	Section No.
CPVC	CPVC	15067
CU	Copper tubing	15070
DIP	Ductile iron pipe	15061
FRP	FRP	15067
PE	Polyethylene	15067
PP	Polypropylene	15067
PVC	PVC	15067
PVDF	PVDF	15067
RPT	Reinforced plastic tubing	15067

End of Section

Section 01650

STARTUP REQUIREMENTS

1. SCOPE. This section includes the requirements for startup and testing all items of equipment and systems that form a part of this Contract. The purpose of this section is to define the requirements for bringing individual equipment, systems, and facilities online and for proving proper operation and performance of that Work. Contractor is required to develop, submit, and maintain detailed plans, including designation of management and staff, for these activities as specified herein. Additional requirements such as training are specified in other sections.

The startup, testing, and commissioning services referenced or specified herein include the following:

Startup and Testing
- Startup checks
- Functional testing

Functional acceptance testing
Commissioning
Operation acceptance testing

1.01. Definitions. Startup and Testing is the transitional phase between completion of construction and start of commissioning and includes the following:

- Pre-Startup Activities and Checks - Inspections, tests and other activities necessary to determine that equipment, systems and subsystems have been properly manufactured and installed. Pre-startup activities shall include an audit of all factory testing of equipment and compiling the results for comparison to startup and commissioning testing.

- Functional Testing – Initial limited operation of equipment, to demonstrate capability of installed components to perform their intended functions, respond to controls, and safely interface with external systems, followed by operation of individual systems in manual and automatic mode to test full functionality of individual systems.

- Commissioning - The establishment of the treatment processes for the plant.

- Operational acceptance testing - Continuous testing of the complete treatment processes under specified operating conditions in accordance with the technical Specifications and applicable regulations to demonstrate proper performance of the facility.

2. GENERAL. The Contractor shall be responsible for and furnish all labor, materials, instruments, incidentals, and equipment required for startup, testing, and commissioning. Temporary facilities required to carry out the specified testing, including temporary pipe, pumps, and other appurtenances, shall be furnished and installed, and removed when no longer required for startup, testing, and commissioning. Refer to the Temporary Facilities section for requirements concerning water and power for startup and testing. Chemicals required for startup and testing shall be provided by the Contractor except as otherwise specified herein. Wastewater, including treated or test water that cannot be delivered to the system for any reason, shall be disposed of at the expense of the Contractor, in a manner acceptable to the Owner, and in accordance with all laws, regulations, and permits.

Startup and testing shall be conducted during normal working hours during the workweek of Monday through Friday, unless otherwise approved by the Owner. Where continuous long-term testing is required, testing may continue over the weekends and holidays with prior approval from the Owner.

2.01. Constraints. Startup and testing shall be conducted in a manner that does not compromise operation of the existing facility or the quality of treated products released from the facility.

The minimum constraints for startup and testing include the following:

Environmental Constraints

3. STARTUP MANAGER, STARTUP TEAM, AND MANUFACTURER'S FIELD SERVICES REPRESENTATIVES. The Contractor shall maintain a dedicated startup team led by a startup manager. The individual to be designated as startup manager shall be identified within 45 days of the Notice to Proceed and will be reviewed by Owner and Engineer. Once accepted, the Contractor shall not change the startup manager throughout the full period of performance of the Work without written permission of the Owner. Once engaged in the Project, the startup manager shall attend regular construction progress meetings. No startup activities shall begin until the startup manager has arrived at the jobsite.

The startup manager shall be on Site full time at least 30 days prior to any field startup and testing activities and shall remain on site until all startup, testing, and commissioning activities are complete.

3.01. Startup Manager. The startup manager shall be a startup and testing expert with a minimum of 5 years of experience starting up equipment and systems of similar type, size, capacity, and complexity to the equipment and systems included in this Project. The startup manager shall have the necessary experience to fully understand all startup requirements, to manage the Contractor's resources providing the startup services, and to prepare all startup

documentation, as specified. The startup manager's assigned duties and responsibilities are those specifically related to planning, supervising, and executing startup activities and shall include, but shall not be limited to the following:

Coordinating all testing and startup activities.

Preparing all startup and field testing plans, documentation, and forms.

Liaising between the Contractor, Engineer, and Owner for all startup and testing activities.

Developing a comprehensive schedule for all startup activities and providing regular schedule updates. The startup and testing schedule shall be incorporated into the Progress Schedule.

Scheduling and leading startup, testing, and commissioning planning meetings.

Conducting coordination meetings during startup, testing, and commissioning at least weekly.

Coordinating manufacturers' services and their certification of proper installation and/or operation of equipment as required by the Specifications.

Overseeing and administering all startup, testing, and commissioning activities, including either direct participation in the activities and/or oversight and monitoring of activities. It shall be the startup manager's responsibility to assure that all tests have been completed in accordance with accepted testing procedures.

Ensuring readiness for and coordinating maintenance, repair, and adjustment of equipment and systems during startup testing, and commissioning.

Conducting or overseeing pre-test checks to ensure readiness for testing. Verify all piping hydrostatic testing and flushing has been completed prior to field testing connected equipment.

Ensuring all testing equipment is in proper working order and has been calibrated to appropriate standards.

Developing safe work policies and procedures including lockout/tagout procedures and personal protective equipment policies, that will be followed during all field startup and testing activities. At a minimum the

Contractor shall comply with OSHA and the Owner's established safety guidelines. It shall be the startup manager's responsibility to assure all safety procedures are followed at all times.

Reviewing and approving all equipment training sessions prior to submission to Engineer, to assure that the training is compliant with the requirements of the Specifications and includes all applicable operation, maintenance, safety, functional, performance, and startup and testing information.

Organizing teams made up of qualified representatives of Suppliers, Subcontractors, and others, as appropriate, to efficiently and expeditiously startup and test the equipment and systems installed and constructed under this Contract. The objective of this program shall be to demonstrate to the Engineer and Owner that the structures, systems, and equipment constructed and installed under this Contract meet all performance requirements and the facility is ready for operation as intended. In addition, the testing program shall produce baseline operating conditions for the Owner to use in a preventive maintenance program.

Ensuring the development and maintenance of records documenting all startup, testing, and commissioning activity. The records shall be organized by major process system into organized files/binders and turned over to the Owner prior to applying for final payment. Testing records shall be accessible to the Engineer and Owner at all times to allow monitoring of the progress.

Ensuring the startup team is equipped and ready to make emergency repairs and adjustments to equipment installed and modified as part of the Project.

Scheduling and conducting a one day workshop with the Owner and Engineer to resolve submittal review comments to the Contractor's startup, testing, and commissioning plan submittal.

Notifying the Owner and all respective equipment manufacturers at least 21 days prior to the date when each equipment system is scheduled for pre-startup activities and checks.

Organize International Electrical Testing Association (NETA) acceptance testing in accordance with the Electrical Equipment Installation section.

3.02. Startup Team. The startup team shall include the startup manager and all staff deemed necessary for successful completion of startup, testing, and commissioning. This will typically include engineers, major equipment vendors, operators, and representatives from the Instrumentation and Control System

Supplier. Additional trade representatives may be included as project requirements dictate.

3.03. Manufacturer's Field Services Representative. The manufacturers shall provide a technically qualified field-service representative for the installation, startup, and testing of equipment furnished, as specified in the equipment sections. The manufacturer shall submit qualifications and experience records for all key personnel to be involved in startup activities.

The manufacturer's field services representative shall be employed full-time in installation, startup, and testing of similar equipment and facilities and work directly for the manufacturer. The representative shall have conducted startup activities similar to those required herein on at least two other projects of similar complexity. The Owner or Engineer shall have the right to reject the manufacturer's field services representative at any time, for immediate replacement by the manufacturer, if the accepted qualifications are not representative of the actual experience or abilities of the representative, as determined by the Owner or Engineer.

4. SUBMITTALS. Contractor shall submit the following information in accordance with the requirements of the Submittals Procedures section.

Startup manager's qualifications and past project experience including contact names, addresses and current telephone numbers of owner representatives that can be used to verify the accuracy of the information. Submittal shall be made at the preconstruction conference.

Manufacturers' field services representative's qualifications and past project experience including contact names, addresses and current telephone numbers that can be used to verify the accuracy of the information. Qualification submittals shall be made 3 weeks before the manufacturer's representative is scheduled to be on Site.

Manufacturer's certification of proper installation of all equipment as specified in the equipment sections.

Equipment and system startup, testing, and commissioning plans and schedule in accordance with the requirements of this section. Startup manager shall coordinate with Subcontractors and include their information in the startup and testing plan.

Unless otherwise specified in the equipment sections, preliminary copies of field calibration results. Submittal shall be made prior to the start of each test for associated systems.

Daily logs.

5. STARTUP AND TESTING REQUIREMENTS.

5.01. Startup Checks**.** Prior to field testing of all equipment, the Contractor shall perform the following:

Inspect and clean equipment, devices, and connected piping so they are free of foreign material.

Lubricate equipment in accordance with manufacturer's instructions.

Turn rotating equipment by hand.

Open and close valves by hand and operate other devices to check for binding, interference, or improper functioning.

Test and commission related electrical system components in accordance with the requirements specified in the Electrical and the Electrical Equipment Installation sections.

Calibrate all instruments associated with the equipment.

Check for proper rotation, adjustment, alignment, balancing, mechanical and electrical connections, and any other conditions that may damage or impair equipment from functioning properly.

Inspect and verify proper anchorage.

Obtain manufacturer's certification of proper installation where specified in the equipment sections.

All equipment shall be confirmed ready to test by the Engineer based on the following**:**

Acceptance of Contractor's startup and testing plan.

Notification in writing by the startup manager that each piece of equipment or system is ready for testing.

Verification by the Engineer and Owner that all lubricants, tools, maintenance equipment, spare parts and approved equipment operation and maintenance manuals have been furnished as specified.

Cleanliness of equipment, devices, and connected work.

Adequate completion of work adjacent to or interfacing with equipment to be tested.

Confirmation of manufacturer's representative's availability to assist with testing, where specified, and satisfactory fulfillment of all other manufacturers' responsibilities as specified.

Engineer's inspection of all related civil construction, mechanical, and electrical installations.

Confirmation of completion of acceptable testing of all adjacent piping, duct work and other affected Work.

5.02. Functional Testing. All startup checks shall be completed prior to functional testing. Functional testing shall be in accordance with relevant standards and in accordance with instructions of the manufacturers.

Ancillary and/or temporary facilities necessary to recycle, control, or discharge water, air, chemical, or gas from facilities being tested, shall be operational.

Functional testing shall include the functional operation of each piece of equipment. All moving parts of equipment and machinery shall be tested and adjusted so that they move freely and function satisfactorily. Functional testing shall demonstrate correct operation of all hardwired interlocks and controls.

Functional testing of power actuated valves shall include at least 4 full open-close operations. Testing shall demonstrate the maximum number of operations per hour as recommended by the actuator manufacturer without overheating.

Once functional testing of individual pieces of equipment is completed, individual systems functional testing shall commence. Individual system functional testing shall include startup of the complete system of mechanical, electrical, and instrumentation and control equipment as a functional process system. Field inspection prior to startup as specified in the Instrumentation and Control System section, other testing by the Instrumentation and Control System Supplier required to verify readiness for automatic operation of the individual system, shall be completed before commencement of individual system functional testing.

Individual system functional testing shall include operation in manual and automatic modes, startup operation, and shutdown in normal and emergency modes. Individual systems shall be tested over their entire operating range and for sufficient time to demonstrate the intended functionality of each piece of equipment and the system. If any part of a system shows evidence of unsatisfactory or improper operation during the test period, correction or repairs shall be made and the functional testing shall be repeated until satisfactory results are obtained.

Functional testing of all process and pumping equipment and drive motors, including auxiliary equipment, shall be in accordance with the appropriate and approved test codes, such as those specified by the American Society of Mechanical Engineers, Hydraulic Institute Standards, and IEEE.

Qualified personnel from the electrical and mechanical trades responsible for installation of the equipment, shall be available during functional testing involving electrically operated equipment. Where appropriate, a representative of the Instrumentation and Control System Supplier shall also be available.

5.03. Functional Acceptance Testing. Once the Contractor's functional testing is complete and associated documentation has been submitted and accepted by the Engineer, the Contractor shall conduct functional acceptance testing of each complete process system, to demonstrate individual systems meet the specified requirements. Acceptance testing shall include the successful demonstration of all operating functions and conditions that are specified for the equipment, system, and controls. The manufacturer's representative shall be on Site during acceptance testing when specified in the equipment specifications.

The Functional Acceptance Testing shall include the following submissions prior to commencement:

Prerequisite checklist, to be acknowledged by the Engineer prior to initiating the test, that demonstrates that all testing and other Work required to be completed prior to the test is complete.

Listing of Owner's personnel necessary to operate the system and conduct any related monitoring of performance.

A listing of Contractor's personnel designated to supervise and direct the Owner's operators as required herein.

Listing of standby personnel, equipment, and materials that will be available if needed during the test period.

Step-by-step procedures for operation of the facility showing how local and remote control of equipment will be demonstrated.

Description of all data and other information to be reported in support of the completed test. Include any blank data logs that may be used for recording results.

Descriptions of all necessary calculations that must be completed to verify the specified results are being achieved, including formulas.

Blank sign-off form for the test acknowledging the Contractor's, Engineer's, Owner's, and the equipment manufacturer's acceptance of the test.

Contractor shall provide Owner and Engineer 14 days notice prior to testing of any individual system.

Individual system acceptance testing shall continue for 48 hours without interruption for each system, and all parts shall operate satisfactorily in all respects under a range of conditions to simulate the full operating range of the equipment or system. If there are multiple parallel components or trains, then the testing duration will be 48 hours for each individual train.

If any part of a system shows evidence of unsatisfactory or improper operation during the testing period, correction or repairs shall be made and the test repeated until the test is successfully completed. Testing interrupted by power failure will not be required to be repeated, but the test shall be continued upon restoration of power and extended to the specified duration at no additional cost to the Owner.

During this testing period the Contractor shall operate all equipment.

6. COMMISSIONING. Once startup and testing is complete; documentation of all startup and testing activities shall be submitted for reviewed and accepted by the Engineer. After acceptance, commissioning of the constructed facilities shall be conducted by the Contractor working with the Owner and Engineer. The facility shall be operated in accordance with the operating permit, laws, and regulations. The Contractor shall provide mechanics, electricians, and controls technicians during commissioning as required for troubleshooting and repair.

7. OPERATIONAL ACCEPTANCE TESTING. Not used.

8. PERFORMANCE TESTING. Not used.

9. STARTUP SCHEDULE AND STARTUP AND COMMISSIONING PLANS. Plans and schedules shall be developed to facilitate coordinated and efficient startup, testing, and commissioning of the Project equipment and systems.

The Contractor shall submit a startup, testing, and commissioning plan and schedule to the Engineer no later than 90 calendar days prior to the commencement of startup and testing. A minimum of 21 days shall be allowed for review by Engineer and Owner. The schedule and plan must be accepted a minimum of 30 days prior to commencement of startup and testing. The schedule and plan shall include sections for startup checks, functional testing, functional acceptance testing, commissioning, and operation acceptance testing.

Forms for startup and testing shall include identification of equipment or system, startup/test date, nature of startup/test, startup/test objectives, startup/test prerequisites, startup/test results, instruments employed for the startup/test and signature spaces for the Engineer's witness (where applicable) and the Contractor's startup manager.

9.01 Startup Schedule. A startup schedule that provides an overall sequence and duration for all startup, testing and commissioning activities, shall be prepared and maintained. This schedule shall serve as a companion to but shall not be a replacement for the startup plan. The startup schedule described in this section shall be integrated into the overall Progress Schedule and shall be prepared as specified for the Progress Schedule in the Construction Progress Schedule section. The Startup Schedule shall be updated weekly during the startup, testing, and commissioning period.

9.02. Startup Plan. The Startup Plan shall include the following:

Introduction with a narrative description of the overall testing and startup program. The description shall include all contractual or regulatory treatment requirements to be demonstrated.

A summary of the objectives and approach for startup checks, functional testing, functional acceptance testing, commissioning, and operational acceptance testing.

List of the instruments, equipment, and systems that will undergo startup and testing with references to the appropriate PIDs, equipment tags/identification numbers, Specification number and standards for testing procedures.

Schedule for startup and field testing for each instrument, piece of equipment (including redundant equipment), and system.

Safety and emergency response plan including a list of emergency and non-emergency contacts (email and phone).

Organization chart for Contractor's startup and testing personnel with assigned responsibilities for each.

Startup and testing record keeping plan.

Plan for reuse and disposal of water/wastewater from startup, testing, commissioning including information on any required regulatory permits/approvals.

Description of temporary facilities that will be provided.

List of chemicals to be provided by the Owner.

Within 7 to 14 days of initial submittal of the startup plan, the Contractor shall schedule a workshop with the Owner and Engineer to present the plan. The Contactor shall submit minutes of the workshop, including action items and a schedule for updating the startup plan, to the Engineer within 3 days of the workshop.

Individual plans for each phase of startup, testing, and commissioning can be assembled as chapters in the startup plan or submitted as individual documents but should be correlated to ensure there is not disagreement between chapters or separate documents.

9.02.01 Startup Checks Plan. The startup checks plan shall be subdivided into plans for each system and major component. Each system/major component plan shall include but not be limited to the following:

Identification of information for each component or piece of equipment to be inspected as part of the system. All applicable tag numbers shall be included.

Specific activities to be completed on each component, piece of equipment, or system as required to demonstrate proper installation and connection.

A tracking checklist of prerequisites for the checks and each step of the checking procedure, including any temporary facilities or utility requirements.

Listing of manufacturer's representative(s) to be on site during the check.

Sign off forms for the Contractor's startup manager.

9.02.02 Functional Testing and Functional Acceptance Testing Plans. The functional testing plan shall include procedures and reporting for functional testing. The functional testing plan shall be subdivided into testing plans for each system. Each system test plan shall include but not be limited to the following:

A narrative description of the purpose and goals of the test for each component, piece of equipment, or system, which should include all activities (including those required by vendors/suppliers) necessary to verify proper equipment and system functionality.

Identification of each component or piece of equipment to be tested as part of the system. All applicable tag numbers shall be included.

Schedule and duration for the tests.

Prerequisites for each test, including any temporary facilities or utility requirements.

Pass/fail criteria for the test.

A checklist for tracking testing progress which includes prerequisites for the test and each step of the testing procedure. The check list shall include specified performance criteria that are to be met.

A description of test apparatus required to conduct the test.

Identification of all temporary facilities and chemicals required during startup.

Listing of manufacturer's representative(s) to be on site during the test.

Certificates of proper installation, as applicable to the test.

Step-by-step detailed procedure of the test. The level of detail shall be sufficient for a witness to be able to follow the steps during the test and be confident that the test is being performed as planned. All steps required to proceed through the test in an orderly manner are considered significant and each of these steps shall be included in the procedure.

Copies of the data recording forms that will be used during the test.

Calculation methodologies to be used to evaluate the data and/or test criteria for the test.

Sample computations or analyses for the test with results in the same format as the final report. This item is intended to demonstrate how data collected will be used to generate final results. A sample shall be included for each type of computation required for the test and analysis of results.

Blank sign-off forms for the test acknowledging the startup manager's, Engineer's, Owner's, and equipment manufacturer's acceptance of the test where applicable.

10. REPORTS AND RECORDS. Records of all startup and testing shall be compiled by the Contractor and submitted to the Engineer. Prior to being submitted to the Engineer and the startup manager shall certify that the results recorded, and the tested systems comply with the Contract requirements. Records shall include all documentation assembled for each piece of equipment

or system involved in the startup and testing, including all certifications, forms, and check lists completed during the startup and test, and sign-off forms.

Records of all startup and testing shall be compiled as separate documents for each system tested and shall be submitted within 48 hours of completion of the startup and testing for each system. Testing samples that require analysis periods greater than 48 hours shall be clearly defined in the startup plan but shall not preclude delivery of the balance of the records within the 48 hour timeframe.

The Contractor shall provide formal reporting and documentation of failures, malfunctions or defects, and repairs made during the startup and/or testing activities. A “System Problem Report” form is included at the end of this section and shall be used by the Contractor to document problems that arise during these tests and their resolution. Records submitted shall include “System Problem Report” forms completed during testing.

SYSTEM PROBLEM REPORT

Project Name: RAHEPF Deep Well Injection Pump and HVAC			
Test Name:			
Test Number:			
Problem Type: Hardware Software Documentation Unknown Other			
SYMPTOMS:	Time:	Date:	By:
Description:			
Can problem be reproduced at will? Y / N			
DIAGNOSIS:	Time:	Date:	By:
Description:			
CORRECTION:	Time:	Date:	By:
Description:			
FINAL SIGN OFF	Time:	Date:	By:

Section 01739

EQUIPMENT INSTALLATION

PART 1 - GENERAL

1-1. SCOPE. This section covers general installation requirements of new equipment units that have been purchased by Contractor as part of this Work. Equipment specific installation requirements are covered in the equipment sections.

1-2. GENERAL. Equipment installed under this section shall be erected and placed in proper operating condition in full conformity with Drawings, Specifications, engineering data, instructions, and recommendations of the equipment manufacturer, unless exceptions are noted by Engineer.

1-2.01. Coordination. When manufacturer's field services are provided by the equipment manufacturer, Contractor shall coordinate the services with the equipment manufacturer. Contractor shall give Engineer written notice at least 30 days prior to the need for manufacturer's field services furnished by others. Flanged connections to equipment including the bolts, nuts, and gaskets are covered in the appropriate pipe specification section.

PART 2 - PRODUCTS

2-1. MATERIALS. Materials shall be as follows:

Grout	As specified in the Grouting section.
Anti-Seize thread lubricant for SS bolts	As specified in the Anchorage in Concrete and Masonry section.

PART 3 - EXECUTION

3-1. INSTALLATION. Equipment shall not be installed or operated except by, or with the guidance of, qualified personnel having the knowledge and experience necessary to obtain proper results as specified in the Startup Requirements section.

Each equipment unit shall be leveled, aligned, and shimmed into position. Installation procedures shall be as recommended by the equipment manufacturer and as required herein. Shimming between machined surfaces will not be permitted.

Anti-seize thread lubricant shall be liberally applied to the threaded portion of all stainless steel bolts during assembly. For equipment installed in drinking water facilities, the anti-seize lubricant shall meet requirements of NSF-61.

When specified in the equipment sections, the equipment manufacturer will provide installation supervision and installation checks. For installation supervision, the manufacturer's field representative will observe, instruct, guide, and direct Contractor's erection or installation procedures as specified in the equipment specifications. For installation checks, the manufacturer's field representative will inspect the equipment installation immediately following installation by Contractor, and observe the tests indicated in the Startup Requirements section. The manufacturer's representatives will revisit the site as often as necessary to ensure installation satisfactory to Owner.

All equipment shall be protected after installation, prior to final acceptance by Owner. Protection provisions shall be as recommended by the manufacturer, and shall include provisions to prevent rust, mechanical damage, and foreign objects entering the equipment.

3-2. STARTUP AND TESTING. Startup requirements, and tests associated with startup shall be as indicated in the Startup Requirements section. Other field tests shall be as indicated in the specific equipment sections. Startup and tests required shall occur in the order listed in the following paragraphs. Tests shall not begin until any installation supervision and installation checks by the equipment manufacturer have been completed, except where noted below.

3-2.01. Preliminary Field Tests. Preliminary field tests shall be conducted on all equipment by Contractor as indicated in the Startup Requirements section. When an installation check is specified in the equipment sections, the equipment manufacturer's representative will participate in these tests to the extent described in the Startup Requirements section and in the equipment sections.

3-2.02. Field System Operation Tests. Field system operation tests shall be conducted on all equipment by Contractor as indicated in the Startup Requirements section. When an installation check is specified in the equipment sections, the equipment manufacturer's service personnel will participate in these tests to the extent described in the Startup Requirements section and in the equipment sections.

3-2.03. Field Demonstration Tests. Field demonstration tests will be conducted by the equipment manufacturer on equipment as indicated and as specified in the equipment sections.

3-2.04. Field Performance Tests & Distribution Tests. Field performance tests or distribution tests will be conducted by the equipment manufacturer on equipment as indicated and as specified in the equipment sections.

3-2.05. Field Baseline Performance Tests. Field baseline performance tests shall be conducted by Contractor on the equipment indicated in the equipment sections, and the tests shall be performed as indicated. When indicated in the equipment sections, the equipment manufacturer will participate in these tests. This test shall not be considered an acceptance test, but rather a test to determine initial performance curves and efficiency just prior to the equipment entering service.

End of Section

Section 01820

DEMONSTRATION AND TRAINING

PART 1 - GENERAL

1.01 DESCRIPTION. This section contains requirements for training the Owner's personnel in the proper operation and maintenance of the equipment and systems installed under this contract.

1.02 GENERAL. Where indicated in the Equipment Schedule section and as required by the specifications, the manufacturer's representative shall provide on-the-job training of the Owner's personnel. The training sessions shall be conducted by qualified, experienced, factory trained representatives of the various equipment manufacturers. Training shall include instruction in both operation and maintenance of the subject equipment.

1.03 SUBMITTALS. The following information shall be submitted to the Engineer in accordance with the provisions of the Submittals section. The material shall be submitted not less than 4 weeks prior to the provision of training.

1. Lesson plans, training manuals, handouts, visual aids, and other reference materials for each training session to be conducted by the manufacturer's representatives.

2. Subject of each training session, identity and qualifications of individuals to be conducting the training, and tentative date and time of each training session.

PART 2 – PRODUCTS

2.01 GENERAL. Where specified, the Contractor shall conduct training sessions for the Owner's personnel to instruct staff on the proper operation, care, and maintenance of the equipment and systems installed under this contract. Training shall take place at the site of the work and under the conditions specified in the following paragraphs. Approved operation and maintenance manuals shall be available at least 30 days prior to the date schedule for the individual training session.

2.02 LOCATION. Training sessions shall take place at the site of the work at a location designated by the Owner.

2.03 LESSON PLANS. Formal written lesson plans shall be prepared for each training session. Lesson plans shall contain an outline of the material to be

presented along with a description of the visual aids to be utilized during the sessions. Each plan shall contain time allocation for each subject.

One complete set of originals of the lesson plans, training manuals, handouts, visual aids and reference materials shall be the property of the Owner and shall be suitable bound for proper organization and easy reproduction. The Contractor shall furnish ten copies of necessary training manuals, handouts, visual aids, and reference materials at least 1 week prior to each training session.

2.04 FORMAT AND CONTENT. Each training session shall include classroom and time at the location of the subject equipment or system. As a minimum, training sessions shall cover the following subjects for each item of equipment or system:

1. Familiarization

    a. Review catalog, parts lists, drawings, etc, which have been previously provided for the plan files and operation and maintenance manuals.
    b. Guided inspection of the subject equipment.
    c. Demonstration of the subject equipment and operation in accordance with the specified requirements.

2. Safety

    a. Review and demonstration of safety procedures and related documentation.
    b. Inspection and discussion of hazardous components of the subject equipment.

3. Operation

    a. Review of subject equipment operations literature and theory of operation.
    b. Overview of equipment operation and function.
    c. Explanation and demonstration of all modes of operation including start up, shut down, normal, and emergency operation, and manual and automatic operation through the plant control system.
    d. Explanation of all hardwired interlocks.
    e. Explanation and demonstration of equipment related valves and their purpose.
    f. Explanation of all equipment related instruments including primary element, instrument indicator, purpose, and interpretation of information.
    g. Check out of Owner's personnel on proper use of the equipment.

4. Preventive maintenance

    a. Review preventative maintenance documentation and discussion of maintenance required at various intervals; e.g. daily, weekly, monthly, annually.
    b. Demonstrate performance of each preventive maintenance task.
    c. Identification of indicators of equipment problems.
    d. Discussion of corrosion protection and lubrication requirements.
    e. Requirements for periodic exercise of equipment and demonstration of equipment exercise where required.
    f. Identification of inspection points and demonstration of inspection covers removal and routine disassembly and assembly of equipment.

5. Corrective Maintenance and Equipment Repair

    a. Discussion of common repairs and identification of special problems.
    b. Explanation and demonstration of equipment inspection and troubleshooting.
    c. Demonstration of calibration procedures.
    d. Demonstration of repair procedures where practical.

6. Parts

    a. Discussion of the parts list and ordering of parts.
    b. Review of spare parts provided with the equipment and identification of other recommended spare parts.

7. Local Representatives

    a. Name, address, telephone of local representative.
    b. Review of contact information for providers of routine and emergency repair and operational assistance.

8. Operation and Maintenance Manuals

    a. Review of O&M manual content and organization.
    b. Update O&M material as required.

2.05 VIDEO RECORDING. The Contractor shall record each training session and shall give the Owner exclusive rights to each training session recording. The Contractor shall advise all manufacturers providing training sessions that the material will be recorded.

PART 3 – EXECUTION

Training shall be conducted in conjunction with the operational testing and commissioning periods. Classes shall be scheduled so that training is performed when equipment is available for operation. The Contractor shall arrange to have the training conducted on consecutive days, with no more than 6 hours of class scheduled for any one day. Concurrent classes will not be permitted.

End of Section

Section 02202

TRENCHING AND BACKFILLING

PART 1 - GENERAL

1-1. SCOPE. This section covers clearing, grubbing, and preparation of the site; removal and disposal of all debris; excavation and trenching; tunneled (trenchless construction) crossings; the handling, storage, transportation, and disposal of all excavated material; all necessary sheeting, shoring, and protection work; preparation of subgrades; pumping and dewatering as necessary; protection of adjacent property; backfilling; pipe embedment; surfacing and grading; and other appurtenant work.

1-2. GENERAL. With reference to the terms and conditions of the construction standards for excavations set forth in OSHA "Safety and Health Regulations for Construction", Chapter XVII of Title 29, CFR, Part 1926, Contractor shall employ a competent person and, when necessary based on the regulations, a licensed or registered professional engineer, to act upon all pertinent matters of the work of this section.

1-3. SUBMITTALS. Drawings, specifications, and data covering the proposed materials shall be submitted in accordance with the Submittals Procedures section.

At least 30 days before starting construction on the sheeting and shoring, and in accordance with the OSHA requirements identified above, the Contractor shall ensure that the sheeting and shoring design engineer shall complete and submit to Engineer the Protective System Design Certificate (Figure 2-02202) and the Contractor shall use the sheeting and shoring design. If required by the OSHA requirements identified above or to protect existing facilities, the Contractor shall submit a separate certificate for each unique design. If required for protection of existing facilities or as required by the OSHA regulations identified above, the certificate(s) shall be signed and sealed by the registered professional engineer that designed the protection system.

1-3.01. Filter Fabric Data. Not used.

1-3.02 Embedment and Backfill Materials. Complete test results covering tests performed by an independent commercial testing laboratory retained by the Contractor for all materials described in the Review of Materials in this section shall be submitted.

1-4. BASIS FOR PAYMENT.

1-4.01. Trench Sheeting. No additional payment above the Contract Price will be made for trench sheeting left in place.

1-5. INSURANCE. Professional liability insurance shall be provided as specified in the Supplementary Conditions section of the Contract documents.

PART 2 - PRODUCTS

2-1. MATERIALS.

2-1.01. Filter Fabric. Not used.

2-1.02. Polyethylene Film. Polyethylene film beneath concrete slabs or slab base course material shall be Product Standard PS17, 6 mil minimum thickness.

2-1.03. Tunnel Materials. Not used.

2-1.04. Backfill Materials.

2-1.04.01. Job Excavated Material. Job excavated material may be used for either uncompacted or compacted trench backfill when the job excavated material is finely divided and free from debris, organic material, cinders, corrosive material, and stones larger than 3 inches in greatest dimension. Masses of moist, stiff clay shall not be used.

2-1.04.02. Inundated Sand Fill. Not used.

2-1.04.03 Graded Gravel Fill. Graded gravel for compacted trench backfill shall conform to the following gradation:

Sieve Size	Percent Passing by Weight
1 inch	100
3/4 inch	85 – 100
3/8 inch	50 – 80
No. 4	35 – 60
No. 40	15 – 30
No. 200	5 – 10

The gravel mixture shall contain no clay lumps or organic matter. The fraction passing the No. 4 sieve shall have a liquid limit not greater than 25 and a plasticity index not greater than 5.

2-1.04.04. Granular Fill. Granular fill material shall be crushed rock or gravel. Granular fill shall be free from dust, clay, and trash; shall be hard, durable, and non-friable; and shall be graded 3/4 inch to No. 4 as defined in ASTM C33 for No. 67 coarse aggregate. Granular fill shall meet the quality requirements for ASTM C33 coarse aggregate.

2-1.05. Controlled Low Strength Material (CLSM) Fill. Not used.

2-1.06. Pipe Embedment Material. Not used.

2-1.06.01. Granular Embedment. Granular embedment shall consist of crushed rock and crushed gravel or pea gravel, meeting the quality and gradation requirements of coarse aggregate size number 7 of ASTM C33.

2-1.06.02. Hand Placed Embedment. Hand placed embedment shall be finely divided job excavated or imported material, free from organic materials, debris, and stones.

2-1.06.03. Compacted Embedment. Compacted embedment shall be finely divided job excavated material free from debris, organic material, and stones. Graded gravel may be substituted for compacted embedment. Granular embedment may be substituted for all or part of the compacted embedment at the option of the Contractor.

2-2. MATERIALS TESTING.

2-2.01. Review of Materials. As stipulated in the Quality Control section, all tests required for review of materials shall be made by an acceptable independent testing laboratory at the expense of Contractor. Tests performed by the aggregate supplier are not acceptable. Tests shall have been performed within 2 months of submittal. Acquisition of samples for testing shall be by the Contractor's independent testing laboratory. Two initial gradation tests shall be made for each type of fill, backfill, or other material, and one additional gradation test shall be made for each additional 500 tons of each material delivered to the site. In addition, one set of initial Atterberg Limits test shall be made for each fill materials containing more than 20 percent by weight passing the No. 200 sieve. One additional Atterberg Limits test shall be made for each additional 500 tons of each material delivered to the site.

2-2.02. Field Testing Expense. All moisture-density (Proctor) tests and relative density tests on the materials, and all in-place field density tests, shall be made by an independent testing laboratory at the expense of Contractor. Contractor shall provide access to the materials and work area and shall assist the laboratory as needed in obtaining representative samples.

2-2.03. Required Tests. For planning purposes, the following guidelines shall be used for frequency of field tests. Additional tests shall be performed as necessary for job conditions and number of failed tests. Test results shall be submitted as specified in the Submittals Procedures section.

Two moisture-density (Proctor) tests in accordance with ASTM D698 (or, when required, ASTM D1557), or two relative density tests in accordance with ASTM D4253 and D4254 for each type of general fill, select fill, structure backfill, granular fill, or other material proposed.

For area fills and backfills, an in-place field density and moisture test for each 1000 cubic yards of material placed.

Minumum one in-place field density and moisture test for every 100 to 200 cubic yards or every lift of structure backfill or select fill whichever yields the greatest amount of test.

Minimum one in-place density and moisture test whenever there is a suspicion of a change in the quality of moisture control or effectiveness of compaction.

At least one test for every full shift of compaction operations on mass earthwork.

Additional gradation, proctor, and relative density tests whenever the source or quality of materials changes.

PART 3 - EXECUTION

3-1. CLEARING. All clearing shall be performed as necessary for access, stringing of pipeline materials, and construction of the pipeline and appurtenant structures.

3-2. EXCAVATION. Excavations shall provide adequate working space and clearances for the work to be performed therein and for installation and removal of concrete forms. In no case shall excavation faces be undercut for extended footings.

Subgrade surfaces shall be clean and free of loose material of any kind when concrete is placed thereon.

Except where exterior surfaces are specified to be damp-proofed, monolithic concrete manholes and other concrete structures or parts thereof, which do not have footings that extend beyond the outside face of exterior walls, may be placed directly against excavation faces without the use of outer forms, provided that such faces are stable and also provided that a layer of polyethylene film is placed between the earth and the concrete.

Excavations for manholes and similar structures constructed of masonry units shall have such horizontal dimensions that not less than 6 inches clearance is provided for outside plastering.

3-2.01. Classification of Excavated Materials. No classification of excavated materials will be made for payment purposes. Excavation and trenching work shall include the removal and subsequent handling of all materials excavated or otherwise removed in performance of the work, regardless of the type, character, composition, or condition thereof.

3-2.02. Preservation of Trees. No trees shall be removed outside excavated or filled areas, unless their removal is authorized by Owner. Trees left standing shall be adequately protected from permanent damage by construction operations.

3-2.03. Blasting. Blasting or other use of explosives for excavation will not be permitted.

3-2.04. Dewatering. Dewatering equipment shall be provided to remove and dispose of all surface water and groundwater entering excavations, trenches, or other parts of the work. Each excavation shall be kept dry during subgrade preparation and continually thereafter until the structure or tunnel to be built, or the pipe to be installed therein, is completed to the extent that no damage from hydrostatic pressure, flotation, or other cause will result.

All excavations for concrete structures or trenches which extend down to or below groundwater shall be dewatered by lowering and keeping the groundwater level to the minimum depth of 12 inches, beneath such excavations. The specified dewatering depth shall be maintained below the prevailing bottom of excavation at all times.

Surface water shall be diverted or otherwise prevented from entering excavations or trenches to the greatest extent possible without causing damage to adjacent property.

Contractor shall be responsible for the condition of any pipe or conduit which he may use for drainage purposes, and all such pipe or conduit shall be left clean and free of sediment.

Contractor shall obtain from the appropriate agencies and authorities, the dewatering and stormwater discharge permits required to remove and dispose of groundwater, surface water, and any other water used in Contractor's operations. The permits shall be obtained prior to start of construction.

3-2.05. Sheeting and Shoring. Except where banks are cut back on a stable slope, excavations for structures and trenches shall be supported with steel sheet piling and shoring as necessary to prevent caving or sliding.

Sheet piling or other excavation support systems shall be installed as necessary to limit the extent of excavations for deeper structures and to protect adjacent structures and facilities from damage due to excavation and subsequent construction. Contractor shall assume complete responsibility for, and shall install adequate protection systems for prevention of damage to existing facilities.

Sheeting, shoring and excavation support systems shall be designed by a professional engineer registered in the state where the project is located.

Trench sheeting may be removed if the pipe strength is sufficient to carry trench loads based on trench width to the back of sheeting. Trench sheeting shall not be pulled after backfilling. Where trench sheeting is left in place, it shall not be braced against the pipe, but shall be supported in a manner which will preclude concentrated loads or horizontal thrusts on the pipe. Cross braces installed above the pipe to support sheeting may be removed after pipe embedment has been completed. Trench sheeting shall be removed unless, in the opinion of Engineer, removal of the sheeting will cause damage to the facility it is protecting or loss of necessary piping support from the piping embedment. If left in place, the sheeting shall cut off 24 inches below finished grade. The design of the support system shall be such as to permit complete removal while maintaining safety and stability at all times.

A movable trench support may be used, provided care is exercised in placing and moving the trench box or support bracing to prevent movement of the pipe and bedding and backfill material meets the required compaction without voids.

3-2.06. Subgrade Preparation. Sub-grades for concrete structures and trench bottoms shall be firm, dense, and thoroughly compacted and consolidated; shall be free from mud and muck; and shall be sufficiently stable to remain firm and intact under the feet of the workers.

Sub-grades for concrete structures or trench bottoms which are otherwise solid, but which become mucky on top due to construction operations, shall be reinforced with crushed rock or gravel as specified for granular fills. The stabilizing material shall be placed in a manner that no voids remain in the granular fill. All excess granular fill with unfilled void space shall be removed. The finished elevation of stabilized sub-grades shall not be above sub-grade elevations indicated on the Drawings.

3-3. TRENCH EXCAVATION. No more trench shall be opened in advance of Work than is necessary to expedite the work. One block or 400 feet, whichever

is the shorter, shall be the maximum length of open trench on any area under construction.

Prior to excavation, Contractor shall contact local underground alert hotlines, “Dig Safe” and/or individual utility owners for marking underground utilities. Once utilities are marked, Contractor shall hand dig or pothole to expose the existing utilities. A survey shall be made of the utility size, material, location, and elevation prior to trench excavation and information shall be recorded on the record Drawings maintained by the Contractor.

3-3.01. Alignment, Grade, and Minimum Cover. The alignment and grade or elevation of each pipeline shall be fixed and determined from offset stakes. Vertical and horizontal alignment of pipes, and the maximum joint deflection used in connection therewith, shall be in conformity with requirements of the section covering installation of pipe.

Where pipe grades or elevations are not definitely fixed by the Drawings, trenches shall be excavated to a depth sufficient to provide a minimum depth of backfill cover over the top of the pipe of 36 inches over pipes below paved and graded streets and of 36 inches over pipes in other locations. Greater pipe cover depths may be necessary on vertical curves or to provide adequate clearance beneath existing pipes, conduits, drains, drainage structures, or other obstructions encountered at normal pipe grades. Measurement of pipe cover depth shall be made vertically from the outside top of pipe to finished ground or pavement surface elevation, except where future surface elevations are indicated on the Drawings.

3-3.02. Maximum Trench Widths. Not used.

3-3.03. Minimum Trench Widths. Trenches shall be excavated to a width which will provide adequate working space and sidewall clearances for proper pipe installation, jointing, and embedment. Except when maximum trench width is required for certain conduits, trenches shall be excavated to the minimum trench widths indicated in the following table, unless indicated otherwise on Drawings.

Nominal Pipe Size	Minimum Trench Width	Clearance
Less than 27 in	Pipe OD plus 24 in	12 in
27 in through 60 in	Pipe OD plus nominal pipe size	ID/2
Greater than 60 in	Pipe OD plus 70 in	30 in

Clearance = Minimum sidewall clearance
OD = Outside diameter (or span) of conduit
ID = Inside diameter (or span) of conduit.

Specified minimum sidewall clearances are not minimum average clearances but are minimum clear distances which will be required to the trench excavation or the trench protective system.

Cutting trench banks on slopes to reduce earth load to prevent sliding and caving shall be used only in areas where the increased trench width will not interfere with surface features or encroach on right-of-way limits.

3-3.04. Mechanical Excavation. The use of mechanical equipment will not be permitted in locations where its operation would cause damage to trees, buildings, culverts, or other existing property, utilities, or structures above or below ground. In all such locations, hand excavating methods shall be used.

Mechanical equipment used for trench excavation shall be of a type, design, and construction, and shall be so operated, that the rough trench excavation bottom elevation can be controlled, and that trench alignment is such that pipe, when accurately laid to specified alignment, will be centered in the trench with adequate sidewall clearance. Undercutting the trench sidewall to obtain sidewall clearance will not be permitted.

In locations where maximum trench widths are required for designated rigid conduits, mechanical equipment shall be operated so that uniform trench widths and vertical sidewalls are obtained at least from an elevation 12 inches above the top of the installed pipe to the bottom of the trench.

3-3.05. Cutting Concrete Surface Construction. Cuts in concrete pavement and concrete base pavements shall be no larger than necessary to provide adequate working space for proper installation of pipe and appurtenances. Cutting shall be started with a concrete saw in a manner which will provide a clean groove at least 1-1/2 inches deep along each side of the trench and along the of cuts for structures.

Concrete pavement and concrete base pavement over trenches excavated for pipelines shall be removed so that a shoulder not less than 6 inches in width at any point is left between the cut edge of the pavement and the top edge of the trench. Trench width at the bottom shall not be greater than at the top and no undercutting will be permitted. Pavement cuts shall be made to and between straight or accurately marked curved lines which, unless otherwise required, shall be parallel to the center line of the trench.

Pavement removal for connections to existing lines or structures shall not exceed the extent necessary for the installation.

Where the trench parallels the length of concrete walks, and the trench location is all or partially under the walk, the entire walk shall be removed and replaced. Where the trench crosses drives, walks, curbs, or other surface construction, the

surface construction shall be removed and subsequently replaced between existing joints or between saw cuts as specified for pavement.

3-3.06. Excavation Below Pipe Sub-grade. Except where otherwise required, pipe trenches shall be excavated below the underside of the pipe, as indicated on Embedment for Conduits figure (Figure 1-02202), to provide for the installation of granular embedment. The bottom of trench excavation shall be cleaned of all loose soil and rock particles and compacted with a wall-behind tamper prior to placing granular pipe embedment.

Bell holes shall provide adequate clearance for tools and methods used for installing pipe. No part of any bell or coupling shall be in contact with the trench bottom, trench walls, or granular embedment when the pipe is jointed.

Unauthorized excavation below the trench bottom shall be corrected by filling with granular embedment material all at no additional cost to the Owner.

3-3.07. Artificial Foundations in Trenches. Whenever unsuitable or unstable soil conditions are encountered at trench bottom, Contractor shall notify Engineer immediately. When authorized by the Engineer, the unsuitable or unstable soil shall be excavated and replaced with suitable material as instructed by Engineer. In such cases, adjustments will be made in the Contract Price in accordance with the provisions of the General Conditions.

3-3.08. Over-Excavation. Over-excavation carried below the grade, unless authorized by the Engineer, shall be backfilled to the required grade with material acceptable to the Engineer and compacted to the satisfaction of the Engineer, at no additional cost to the Owner.

3-4. PIPE EMBEDMENT. Embedment materials both below and above the bottom of the pipe, classes of embedment to be used, and placement and compaction of embedment materials shall conform to the requirements indicated on Figure 1-02202 and to the following supplementary requirements.

Embedment material shall contain no cinders, clay lumps, or other material which may cause pipe corrosion.

3-4.01. Embedment Classes.

a. Class A Arch Encasement. When arch encasement is indicated on the Drawings, Class A arch encasement shall be used at all locations so indicated. When arch encasement is not indicated on the Drawings, Class A arch encasement is not required unless improper trenching or unexpected trench conditions require its use as determined by Engineer. Concrete and reinforcing steel for Class A

arch encasement shall conform to the requirements of the Cast-in-Place Concrete and Concrete Reinforcement sections.

b. Class B Embedment. Class B bedding shall be used for all steel, ductile iron, bar-wrapped concrete, and vitrified clay pipelines, and for all other pipelines not otherwise specified.

c. Class B Special Embedment. Class B special embedment shall be used for HDPE, PVC, ABS, FRP, GRP, steel or stainless steel pipe where the process fluid design maximum temperature is 140° F or higher such as for pressurized air service, and when recommended by the pipe manufacturer.

d. Class C Embedment. Class C embedment shall be used for all reinforced concrete and prestressed concrete pipelines.

3-4.02. Embedment for Ductile Iron, Steel, FRP, and PVC Pipelines. Granular embedment for polyethylene tube protected ductile iron, coal tar or tape coated steel, FRP, and PVC pipelines shall be pea gravel, crushed rock or crushed gravel with rounded or subrounded particles. Crushed rock or gravel with sharp edges which could cause significant scratching or abrasion of the pipe or damage to the coating or polyethylene tube protection shall not be used unless otherwise approved by Engineer and all damage is repaired to the satisfaction of Engineer.

3-4.03. Placement and Compaction.

3-4.03.01. Granular Embedment. Granular embedment material shall be spread and the surface graded to provide a uniform and continuous support beneath the pipe at all points between bell holes or pipe joints. It will be permissible to slightly disturb the finished subgrade surface by withdrawal of pipe slings or other lifting tackle.

After each pipe has been graded, aligned, and placed in final position on the bedding material, and shoved home, sufficient pipe embedment material shall be deposited and compacted under and around each side of the pipe and back of the bell or end thereof by shovel slicing or other suitable methods to hold the pipe in proper position and alignment during subsequent pipe jointing and embedment operations.

Placing and compaction of embedment material shall not damage the pipe coating or polyethylene encasement. Embedment material shall not be dumped directly on the pipe or polyethylene encasement unless a suitable temporary isolation layer such as a 60 mil HDPE sheeting, is used to cover the pipe and polyethylene encasement.

Embedment material shall be deposited and compacted uniformly and simultaneously on each side of the pipe to prevent lateral displacement.

Granular embedment shall be placed in layers not more than 6 inches deep and compacted as specified.

Each lift of granular embedment material shall be vibrated with a mechanical probe type vibrator or shovel sliced during placement to ensure that all spaces beneath the pipe are filled. Granular embedment shall be placed in maximum lift thickness of 6 inches and compacted. Each lift of embedment material shall be compacted with three passes (round trip) of a platform type vibrating compactor and to at least 70 percent relative density as determined by ASTM D4253 and D4254.

Where indicated on the Drawings or where silt, fine sand, or soft clay soils are encountered below groundwater, migration of soil into the embedment material shall be prevented by installing filter fabric Type A, or by using graded gravel in place of granular embedment. Filter fabric shall be placed on the trench surfaces so that it completely surrounds the embedment material. Joints shall be lapped 12 inches.

3-4.03.02. Compacted Embedment. Compacted embedment shall be placed in uniform layers not more than 8 inches thick and compacted to not less than 98% maximum density as determined by ASTM D-1557.

Where Class C embedment is required, compacted embedment shall be placed to the top of the pipe in all areas where compacted trench backfill is specified and around restrained pipe sections. Placing and compaction of embedment shall not damage the pipe or coating.

3-4.03.03 Hand Placed Embedment. Hand placed embedment shall be placed by hand shovels or using methods that prevent dropping the material from more than 24 inches above the pipe. Hand placed embedment shall be lightly tamped using hand equipment. Care shall be taken so as to not damage the pipe or coating.

3-4.03.04. Compaction - Trench Box Support Systems. Where trench box support systems are used embedment compaction shall be performed outside the limits of the trench box so that relocating the trench box will not disturb the compacted embedment. Where necessary to protect workers, the compaction may be performed by compaction rollers or other compaction systems that are operated from above the trench and achieve the required compaction.

Trench boxes for earth trenches shall be positioned such that the bottom of the trench box is no lower than approximately two feet above the bottom of pipe invert elevation so that initial compaction of the haunch area of the pipe, from within the trench box, extends the full width of trench. Trenches shall be shaped to support the trench box above the bottom of trench.

When in rock and where it is not practicable to shape the trench to provide the trench box support above the bottom of the trench, initial compaction of the haunch area may be performed within the trench box.

Final compaction of the haunch area and all other compaction shall be performed outside the limits of the trench box after the trench box has advanced into the next section of trench.

3-5. TRENCH BACKFILL. All trench backfill above pipe embedment shall conform to the following requirements.

A layer of backfill material not more than 8 inches deep may be placed over concrete arch encasement or concrete thrust blocking after the concrete has reached its initial set, to aid curing. No additional backfill shall be placed over arch encasement or blocking until the concrete has been in place for at least 3 days.

3-5.01. Compacted Backfill. Compacted backfill will be required for the full depth of the trench above the embedment in the following locations:

Where beneath pavements, surfacings, driveways, curbs, gutters, walks, or other surface construction or structures.

Where in street, road, or highway shoulders.

In established lawn areas.

The top portion of backfill beneath established lawn areas shall be finished with at least 12 inches of topsoil corresponding to, or better than that which is underlying adjoining lawn areas.

Trench backfill material shall be suitable job excavated material or graded gravel and shall be as specified herein.

3-5.01.01. Job Excavated Material. Job excavated materials shall be placed in uniform layers not exceeding 8 inches in uncompacted thickness. Each layer of material shall have the best possible moisture content for satisfactory compaction. The material in each layer shall be wetted or dried as needed and thoroughly mixed to ensure uniform moisture content and adequate compaction. Increased layer thickness may be permitted for noncohesive material if Contractor demonstrates to the satisfaction of Engineer that the specified compacted density will be obtained. The method of compaction and the equipment used shall be appropriate for the material to be compacted and shall not transmit damaging shocks to the pipe. Job excavated material shall be compacted to 98 percent of maximum density at a moisture content within 2 percent of the optimum moisture content as determined by ASTM D1557 when

that test is appropriate, or to 70 percent relative density as determined by ASTM D4253 and D4254 when those tests are appropriate.

3-5.01.02. Inundated Sand. Not used.

3-5.01.03. Graded Gravel. Gravel backfill shall be deposited in uniform layers not exceeding 8 inches in uncompacted thickness. The backfill shall be compacted with a suitable vibratory roller or platform vibrator to at least 70 percent relative density as determined by ASTM D4253 and D4254. Groundwater barriers specified under pipe embedment shall extend to the top of the graded gravel backfill.

3-5.02. Ordinary Backfill. Compaction of trench backfill above pipe embedment in locations other than those specified will not be required except to the extent necessary to prevent future settlement. Contractor shall be responsible for backfill settlement as specified.

Ordinary earth backfill material to be placed above embedments shall be free of brush, roots more than 2 inches in diameter, debris, cinders, and any corrosive material, but may contain rubble and detritus from rock excavation, stones, and boulders in certain portions of the trench depth.

Backfill material above embedments shall be placed by methods which will not impose excessive concentrated or unbalanced loads, shock, or impact on installed pipe, and which will not result in displacement of the pipe.

Compact masses of stiff clay or other consolidated material more than 1 cubic foot in volume shall not be permitted to fall more than 5 feet into the trench, unless cushioned by at least 2 feet of loose backfill above pipe embedment.

No trench backfill material containing rocks or rock excavation detritus shall be placed in the upper 24 inches of the trench, nor shall any stone larger than 8 inches in its greatest dimension be placed within 3 feet of the top of pipe. Large stones may be placed in the remainder of the trench backfill only if well separated and so arranged that no interference with backfill settlement will result.

3-5.03. Water-Settled Earth Backfill. Settlement or consolidation of trench backfill using water jetting or ponding shall not be performed.

3-5.04. Structure Backfill. Backfill around manholes and small concrete vaults shall meet the requirements specified for structure backfill specified in the Excavation and Fill for Structures section.

3-5.05. Controlled Low Strength Material (CLSM). Not used.

3-6. TUNNEL EXCAVATION. Not used.

3-7. DRAINAGE MAINTENANCE. Trenches across roadways, driveways, walks, or other trafficways adjacent to drainage ditches or watercourses shall not be backfilled prior to completion of backfilling the trench on the upstream side of the trafficway, to prevent impounding water after the pipe has been laid. Bridges and other temporary structures required to maintain traffic across such unfilled trenches shall be constructed and maintained by Contractor. Backfilling shall be done so that water will not accumulate in unfilled or partially filled trenches. All material deposited in roadway ditches or other watercourses crossed by the line of trench shall be removed immediately after backfilling is completed, and the original section, grades, and contours of ditches or watercourses shall be restored. Surface drainage shall not be obstructed longer than necessary.

3-8. PROTECTION OF TRENCH BACKFILL IN DRAINAGE COURSES. Not used.

3-9. FINAL GRADING AND PLACEMENT OF TOPSOIL. After other outside work has been finished, and backfilling and embankments completed and settled, all areas which are to be graded shall be brought to grade at the indicated elevations, slopes, and contours. All cuts, fills, embankments, and other areas which have been disturbed or damaged by construction operations shall be surfaced with topsoil to a depth of at least 4 inches. Topsoil shall be of a quality at least equal to the existing topsoil in adjacent areas, free from trash, stones, and debris, and well suited to support plant growth. Topsoil required to provide the minimum thickness shall be imported and placed at no additional cost to the Owner.

Use of graders or other power equipment will be permitted for final grading and dressing of slopes, provided the result is uniform and equivalent to manual methods. All surfaces shall be graded to secure effective drainage. Unless otherwise indicated, a slope of at least 1 percent shall be provided.

Final grades and surfaces shall be smooth, even, and free from clods and stones, weeds, brush, and other debris.

3-10. DISPOSAL OF EXCESS EXCAVATED MATERIALS. Disposal of excess material from trench excavation sites shall be as follows. Except as otherwise permitted, all excess excavated materials shall be disposed of away from the site.

Broken concrete and other debris resulting from pavement or sidewalk removal, excavated rock in excess of the amount permitted to be installed in trench backfill, debris encountered in excavation work, and other similar waste materials shall be disposed of away from the site.

Excess earth from excavations located in unimproved property may be distributed directly over the pipe trench and within the pipeline right-of-way to a maximum depth of 6 inches above the original ground surface elevation at and across the trench and sloping uniformly each way. Material thus wasted shall be carefully finished with a drag, blade machine, or other suitable tool to a smooth, uniform surface without obstructing drainage at any point. Wasting of excess excavated material in the above manner will not be permitted where the line of trench crosses or is within a railroad, public road, or highway right-of-way. The disposal of waste and excess excavated materials, including hauling, handling, grading, and surfacing, shall be a subsidiary obligation of Contractor and no separate payment will be made therefore.

3-11. RESODDING. All established lawn areas cut by the line of trench or damaged during the work shall be re-sodded, after completion of construction, to the complete satisfaction of the property owner and Owner. All sod used shall be the same type as removed or damaged, shall be best quality, and, when placed, shall be live fresh growing grass with at least 1-1/2 inches of soil adhering to the roots.

All sod shall be procured from areas where soil is fertile and contains a high percentage of loamy topsoil and from areas that have been grazed or mowed sufficiently to form a dense turf.

Sod shall be transplanted within 24 hours from the time it is harvested, unless stacked at its destination in a suitable manner. All sod in stacks shall be kept moist and protected from exposure to the sun. In no event shall more than 1 week elapse between cutting and planting.

Before placing sod, all shaping and dressing of the areas shall have been completed. After shaping and dressing, commercial fertilizer of a type acceptable to Owner shall be applied uniformly in the manner and amounts recommended by the manufacturer, and harrowed lightly. Sodding shall follow immediately.

3-12. SETTLEMENT. Contractor shall be responsible for all settlement of trench backfill which may occur within the correction period stipulated in the General Conditions.

Contractor shall make, or cause to be made, all repairs or replacements made necessary by settlement within 30 days after notice from Engineer or Owner.

End of Section

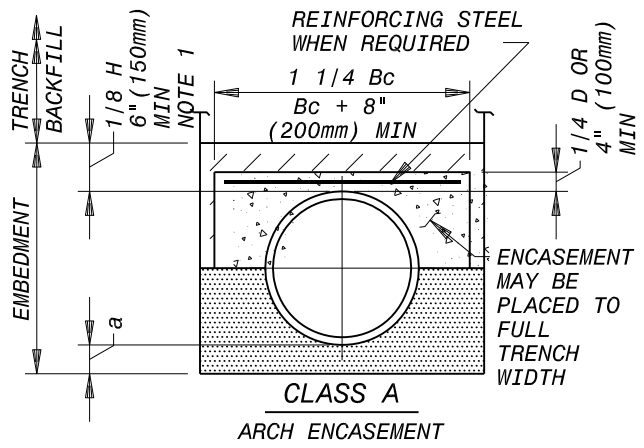

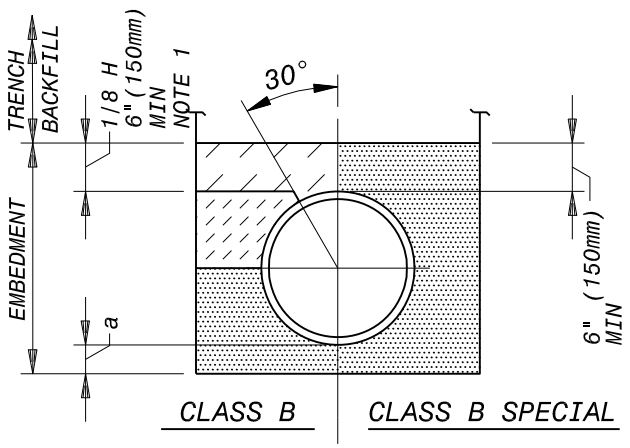

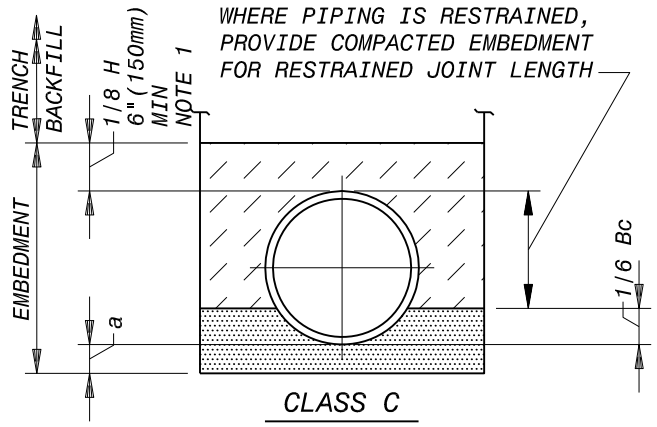

TABLE OF EMBEDMENT DEPTHS BELOW PIPE

D	a MIN SOIL		a MIN ROCK	
	in	mm	in	mm
27"(675 mm) & SMALLER	3	75	6	150
30"(750 mm) TO 60"(1500 mm)	4	100	9	225
66"(1650 mm) & LARGER	6	150	12	300

NOTES:

1. EMBEDMENT ABOVE THE TOP OF THE PIPE SHALL BE AN UNCOMPACTED LAYER FOR ALL INSTALLATIONS.
2. REFER TO SPECIFICATIONS FOR GEOTECHNICAL FABRIC OR SPECIAL EMBEDMENT REQUIREMENTS FOR TRENCHES IN FINE SOILS EXTENDING BELOW GROUNDWATER LEVEL.
3. TRENCH OUTLINES DO NOT INDICATE ACTUAL TRENCH EXCAVATION SHAPE, SOIL CONDITIONS, OR PRESENCE OF SHEETING LEFT IN PLACE. EMBEDMENT MATERIAL SHALL EXTEND THE FULL WIDTH OF THE ACTUAL TRENCH EXCAVATION.
4. FOR RESTRAINED JOINT PIPE LENGTH WITH CLASS C EMBEDMENT THE BACKFILL ABOVE THE GRANULAR EMBEDMENT AND BELOW THE TOP OF THE PIPE SHALL BE COMPACTED EMBEDMENT.

LEGEND

Bc OUTSIDE DIAMETER OF PIPE
H COVER ABOVE TOP OF PIPE
D NOMINAL PIPE SIZE
a EMBEDMENT BELOW PIPE (SEE TABLE)

HAND PLACED EMBEDMENT *

COMPACTED EMBEDMENT *

GRANULAR EMBEDMENT

CONCRETE

* OR GRANULAR EMBEDMENT

EMBEDMENTS FOR CONDUITS

BLACK & VEATCH	TRENCHING AND BACKFILLING	FIG 1-02202

PROTECTIVE SYSTEM
DESIGN CERTIFICATE – Figure 2 - 02202

I, the undersigned professional engineer registered in the state where the Project is located, hereby certify that the protection system for _____(trench location) has been designed by me, is appropriate for the (trench location) as represented to me, and is in compliance with the Contract Documents.

Name: _____ State of Registration: _____

Signature: _____ P.E. Number _____

Date: _____

_____
(Seal)

Section 02704
PIPELINE PRESSURE AND LEAKAGE TESTING

PART 1 - GENERAL

1-1. SCOPE. This section covers field hydrostatic pressure and leakage testing of piping. The term "piping" shall be used in this section to refer to piping systems, pipelines, or sections thereof.

1-2. GENERAL. Contractor shall coordinate pressure and leakage testing with adjacent work as necessary to preclude work interferences or duplication of effort and to expedite the overall progress of the work.

Contractor shall provide all necessary piping, piping connections, temporary valves, backflow preventers, and all other items of equipment or facilities necessary to complete the pressure and leakage testing.

In all cases where it is necessary to interrupt service, permission of Owner shall be obtained at least two days before the service will be interrupted.

Contractor shall notify federal, state, and local regulatory agencies to determine if any special procedures or permits are required for disposal of water used for pressure and leakage testing and to identify acceptable locations for disposal of the water. All requirements and costs associated with notifications and obtaining any discharge permit or approvals shall be responsibility of Contractor.

Engineer or Engineer's representative shall be present during testing and shall be notified of the time and place of testing at least 3 days prior to commencement of testing. All testing shall be performed to the satisfaction of Engineer, and in accordance with all governing standards and regulations.

1-2.01. Testing Schedule and Procedure. A testing schedule and procedure shall be submitted to Owner for review and acceptance not less than 21 days prior to commencement of testing. The schedule and procedure shall include, but not be limited to the following information for each pipe section to be tested:

- limits of each pipe test section;
- proposed time and sequence;
- physical locations and set positions of all valves;
- locations of temporary bulkheads, stops, caps, restraints, supports, and other temporary equipment needed;
- manner of filling and source of water;
- method and location of metering volumes;
- method and location of gauging pressures; and

method and location of disposal of test water.

1-2.02. Special Testing Requirements. Not used

1-2.03. Water. Following completion of testing, the water shall be disposed of in accordance with the requirements of regulatory agencies and in a manner acceptable to Owner.

PART 2 - PRODUCTS

2-1. TEST EQUIPMENT. All necessary connections between the piping to be tested and the water source, together with pumping equipment, water meter, pressure gauges, backflow prevention, and all other equipment, materials, and facilities required to perform the specified tests, shall be provided. All required blind flanges, valves, bulkheads, bracing, blocking, and other sectionalizing devices shall also be provided. All temporary sectionalizing devices shall be removed upon completion of testing. Vents shall be provided in test bulkheads where necessary to expel air from the piping to be tested.

Test pressure shall be applied by means of a force pump sized to produce and maintain the required pressure without interruption during the test.

Water meters and pressure gauges shall be accurately calibrated and shall be subject to review and acceptance by Owner.

Permanent or temporary gauge connections shall be installed at each location where test gauges are connected to the piping during the required test. Drilling and tapping of pipe walls will not be permitted. Upon successful completion of testing, each permanent gauge connection shall be fitted with an isolation valve and a permanent gauge, and each temporary gauge connection, if used, shall be fitted with a permanent sealed plug or cap acceptable to the Owner.

Permanent or temporary fill and vent connections shall be installed as needed for the required test. Drilling and tapping of pipe walls will not be permitted. Upon successful completion of testing, each permanent fill and vent connection shall be fitted with the permanent fill or vent piping, and each temporary fill and vent connection, if used, shall be fitted with a permanent sealed plug or cap acceptable to the Owner.

PART 3 - EXECUTION

3-1. FILLING AND VENTING. Before filling the piping with water, care shall be taken to ensure that all air release valves and other venting devices are properly installed and operating properly. Hand-operated vent valves shall not be closed

until an uninterrupted stream of water is flowing from each valve. The rate of filling the piping with water must not exceed the venting capacity of the installed air vent valves and devices.

3-2. BLOCKING AND BACKFILLING. Piping shall be adequately blocked, anchored, and supported before the test pressure is applied.

3-3. PRESSURE TESTING. After the piping to be tested has been filled with water, the test pressure shall be applied and maintained without interruption within plus or minus 5 psi of test pressure for 2 hours plus any additional time required for Engineer to examine all piping being tested and for Contractor to locate any defective joints and pipe materials. The test pressure shall be in accordance with the requirements specified for pipeline or plant piping.

3-3.01. Pipeline Test Pressure. Not used.

3-3.02. Plant Piping Test Pressure. Effluent Piping shall be subjected to the test pressure of 200 psi.

3-4. PLANT PIPING LEAKAGE TESTING. All plant piping shall be watertight and free from leaks. Each leak which is discovered within the correction period stipulated in the General Conditions shall be repaired by and at the expense of Contractor.

3-5. PIPELINE LEAKAGE TESTING. Not used.

End of Section

Section 09940

PROTECTIVE COATINGS

PART 1 - GENERAL

1-1. SCOPE. This section covers field applied protective coatings, including surface preparation, protection of surfaces, inspection, and other appurtenant work for equipment and surfaces designated to be coated with heavy-duty maintenance coatings. Regardless of the number of coats previously applied, at least two field coats in addition to any shop coats or field prime coats shall be applied to all surfaces unless otherwise specified.

1-2. GENERAL. Cleaning, surface preparation, coating application, and thickness shall be as specified herein and shall meet or exceed the coating manufacturer's recommendations. When the manufacturer's minimum recommendations exceed the specified requirements, Contractor shall comply with the manufacturer's minimum recommendations. When equivalent products are acceptable to Engineer, Contractor shall comply with this Specification and the coating manufacturer's recommendations.

1-2.01. Governing Standards. All cleaning, surface preparation, coating application, thickness, testing, and coating materials (where available) shall be in accordance with the referenced standards of the following AWWA, ANSI, NACE, SSPC, NSF, and ASTM.

1-2.02. Delivery and Storage. All coating products shall be received and stored in accordance with the coating manufacturer's recommendations.

1-2.03. Coatings, Painting, and Linings Covered in Other Sections. Not used.

1-3. SUBMITTALS. Contractor shall submit color cards for all coatings proposed for use, together with complete descriptive specifications, manufacturer's product data sheet and the completed Coating System Data Sheets, to Engineer for review and color selection. Each product data sheet shall include application temperature limits including recoat time requirements for the ambient conditions at the site, including temperatures up to 130°F. Requests for review submitted directly to Engineer by coating suppliers will not be considered.

When the proposed products will be in contact with treated or raw water in potable water treatment facilities, Contractor shall submit certifications that the proposed systems are in compliance with ANSI/NSF 61.

Contractor shall submit a Coating System Data Sheet for each separately identified surface in the Metal Surfaces Coating Schedule, Concrete and Masonry Surfaces Coating Schedule, and the Miscellaneous Surfaces Coating

Schedule that will be used in the Project, using the appropriate Coating System Data Sheet forms (Figures 1-09940 and 2-09940) at the end of this section. Each field coating system shall be acceptable to the coating material manufacturer.

Coating System Data Sheets shall be assigned a unique number with a prefix letter based on the following:

Prefix	Surfaces	Fig. 09940
A	Iron and steel (coated entirely in field)	1
A	Iron and steel (shop primed)	2
C	Concrete and concrete block	1
E	Equipment - submerged	1
E	Equipment – nonsubmerged	2
F	Nonferrous metal	1
G	Galvanized	1
H	High temperature	1
P	PVC and FRP	1

Each coating system that will be applied entirely in the field shall be assigned only a prefix letter and no suffix letter. Fig.1-09940 shall be submitted for each surface coated entirely in the field.

Each shop-applied coating system that includes one or more field applied coats shall be assigned both a prefix letter and suffix letter “F”. Fig.2-09940shall be submitted for each surface having a shop applied coating and one or more field applied finish coats.

A separate Coating System Data Sheet shall be developed and submitted for each surface scheduled to be coated or variation or change in a coating system. The number identifying the surface and coating system shall be of the form $A1_1$ or $A1_2$-F. The subscript number shall be assigned by the Contractor so that each surface and coating system combination is uniquely identified. For example:

> $A1_1$-F may be assigned to “Epoxy – one coat to metal curbs for skylights and power roof ventilators that have been shop primed.”
>
> $A2_1$ may be assigned to “Epoxy – two coats to non-galvanized structural and miscellaneous steel exposed to view inside buildings.”

$C2_1$ may be assigned to "Epoxy – two coats to all concrete and concrete block in corrosive area (Except floors and surfaces scheduled to receive other coatings) which are exposed to view."

$C2_2$ may be assigned to "Epoxy – two coats to walls, floors, and curbed areas, adjacent to corrosive chemical storage and feed equipment."

The manufacturer's standard colors will be acceptable for all coatings.

1-4. QUALITY ASSURANCE.

1-4.01. Coating System Data Sheet Certifications. The coating applicator and coating manufacturer shall review and approve in writing the coating manufacturer's written recommendations for the coating system and the intended service. Any variations from the Specifications or the coating manufacturers published recommendations shall be submitted in writing and approved by the coating manufacturer.

1-4.02. Special Interior Coating Systems. Not used.

PART 2 - PRODUCTS

2-1. ACCEPTABLE MANUFACTURERS.

2-1.01. Alternative Manufacturers. In addition to the coatings listed herein, equivalent products of other manufacturers that distribute globally will also be acceptable.

2-1.02. Equivalent Coatings. Whenever a coating is specified by the name of a proprietary product or of a particular manufacturer or vendor, it shall be understood as establishing the desired type and quality of coating. Other manufacturers' coatings will be accepted, provided that sufficient information is submitted to enable Engineer to determine that the proposed coatings are equivalent to those named. Information on proposed coatings shall be submitted for review in accordance with the Submittals Procedures section. Requests for review of equivalency will be accepted only from Contractor, and will be considered only after the contract has been awarded.

2-2. MATERIALS. All coatings shall be delivered to the job in original, unopened containers, with labels intact. Coatings shall be stored indoors and shall be protected against freezing. No adulterant, unauthorized thinner, or other material not included in the coating formulation shall be added to the coating for any purpose.

All coatings shall conform to the air quality regulations applicable at the location of use. Coating materials that cannot be guaranteed by the manufacturer to conform, whether or not specified by product designation, shall not be used.

With the exception of heat resistant coatings, the coatings specified have been selected on the basis of the manufacturer's statement that the VOC content of the product is 2.8 lbs per gallon or less; however, it shall be the Contractor's responsibility to use only coating materials that are in compliance with the requirements of all regulatory agencies. Local regulations may require some coatings to have a lower VOC content than specified herein. The coatings specified may meet the VOC limits in the unthinned (as shipped) condition, but may exceed the limits if thinned according to the manufacturer's recommendations. In such case, the coatings shall not be thinned beyond the 2.8 lbs per gallon limit, and if the product cannot be thinned to suit the application method or temperature limits, another manufacturer's coating shall be used, subject to acceptance by Engineer.

Contractor shall be responsible for ensuring the compatibility of field coatings with each other or with any previously applied coatings. Coatings used in successive field coats shall be produced by the same manufacturer. The first field coat over shop coated or previously coated surfaces shall cause no wrinkling, lifting, or other damage to underlying coats.

All intermediate and finish coating materials that will be in contact with wastewater atmosphere shall be guaranteed by the manufacturer to be fumeproof and suitable for wastewater plant atmosphere that contains hydrogen sulfide. Coatings that cannot be so guaranteed shall not be used. Lead-free, chromium-free, and mercury-free coatings shall be used.

2-2.01 Primers.

Universal Primer (tie coat)	PPG Amercoat "Amercoat 385 Epoxy", Carboline "Rustbond", ICI Devoe "Devran 224HS", Tnemec "Series 27 F.C. Typoxy", or Sherwin-Williams "Dura Plate 235".
Zinc Primer	PPG Amercoat "Dimetate 9 Series", Carboline "Carbo Zinc II Series", ICI Devoe "Catha-Coat 304V", or Sherwin-Williams "Zinc Clad II Series".

2-2.02. Fillers and Surfacers.

Epoxy Concrete Block Filler	PPG Amercoat "Amerlock 400BF Epoxy Block Filler", Carboline "Sanitile 600", ICI Devoe "Truglaze 4015", Tnemec "Series 54-562", or

	Sherwin-Williams "Kem Cati-Coat HS".
Epoxy Concrete Filler and Surfacer	Tnemec "Series 218 MortarClad", PPG Amercoat "NuKlad 114A", Carboline "Carboguard 510", or Sherwin-Williams "Steel Seam FT910".

2-2.03. Intermediate and Finish Coatings.

Epoxy (NSF certified systems)	
Ferrous Metal Surfaces and Concrete Surfaces in Contact with Treated or Raw Water in Potable Water Facilities	PPG Amercoat "Amerlock 400 High-Solids Epoxy Coating", Carboline "Carboguard 891", ICI Devoe "Bar-Rust 233H" Tnemec "Series N140 Pota-Pox Plus", or Sherwin-Williams "Dura Plate 235 NSF"; immersion service.
Epoxy	
Concrete Floors	PPG Amercoat "Amerlock 400", Carboline "Carboguard 890", ICI Devoe "Devran 224HS", Tnemec "Series N69 Hi-Build Epoxoline II", or Sherwin-Williams "Armorseal 1000HS"; nonskid.
Ferrous Metal Surfaces and Masonry or Concrete Surfaces Other Than Floors	PPG Amercoat "Amercoat 385 Epoxy", Carboline "Carboguard 890", ICI Devoe Devran "224HS", Tnemec "Series N69 Hi-Build Epoxoline II", or Sherwin-Williams "Dura Plate 235".
Flake-Filled Epoxy	Carboline "Plasite 4500/4500S", Sherwin-Williams "Sher-Glass FF".
Aliphatic Polyurethane	PPG Amercoat "Amercoat 450H", Carboline "Carbothane 134HG", ICI Devoe "Devthane 379H" Tnemec "Series 1074 Endura-Shield II", or Sherwin-Williams "Acrolon 218HS".

Coal Tar Epoxy	High-build coal tar epoxy; PPG Amercoat "Amercoat 78HB Coal Tar Epoxy", Carboline "Bitumastic 300 M", Tnemec "46H-413 Hi-Build Tneme-Tar", or Sherwin-Williams "Hi-Mil Sher-Tar Epoxy".
Medium Consistency Coal Tar	Carboline "Bitumastic 50" or Tnemec "46-465 H.B. Tnemecol".
Vinyl Ester	Tnemec "Series 120 Vinester" Carboline "Plasite 4110" or Sherwin-Williams "Magnalux 304FF".
Heat-Resistant	Suitable for temperatures up to 400°F; PPG Amercoat "Amerlock 400", Carboline "Thermaline 450", Tnemec "43-36 Chrome Aluminum", or Sherwin-Williams "Silver-Brite Aluminum".
High Heat-Resistant	Suitable for temperatures up to 1000°F; PPG Amercoat "Amercoat 878", Carboline "Thermaline 4700 VOC", or Sherwin-Williams "Silver-Brite Hi-Heat Silicone Aluminum".

PART 3 - EXECUTION

3-1. SURFACE PREPARATION. All surfaces to be coated shall be clean and dry and shall meet the recommendations of the coating manufacturer for surface preparation. Freshly coated surfaces shall be protected from dust and other contaminants. Oil and grease shall be completely removed by use of solvents or detergents before mechanical cleaning is started. The gloss on previously coated surfaces shall be dulled if necessary for proper adhesion of topcoats.

Surfaces shall be free of cracks, pits, projections, or other imperfections that would interfere with the formation of a smooth, unbroken coating film, except for concrete block construction where a rough surface is an inherent characteristic.

When applying touchup coating or repairing previously coated surfaces, the surfaces to be coated shall be cleaned as recommended by the coating manufacturer, and the edges of the repaired area shall be feathered by sanding or wire brushing to produce a smooth transition that will not be noticeable after the coating is applied. All coatings made brittle or otherwise damaged by heat of welding shall be completely removed.

3-1.01. Galvanized Surfaces. Galvanized surfaces shall be prepared for coating according to the instructions of the manufacturer of the epoxy. Any chemical treatment of galvanized surfaces shall be followed by thorough rinsing with clean water.

3-1.02. Ferrous Metal Surfaces. Ungalvanized ferrous metal surfaces shall be prepared for coating by using one or more of the following cleaning procedures specified here-in: solvents (SSPC-SP1); abrasive blasting (SSPC-SP5, -SP10, -SP6, or -SP7) power tools (SSPC-SP3 or -SP11); or hand tools (SSPC-SP2). Oil and grease shall be completely removed in accordance with SSPC-SP1 before beginning any other cleaning method. Surfaces of welds shall be scraped and ground as necessary to remove all slag and weld spatter. Tools which produce excessive roughness shall not be used.

All components of equipment that can be properly prepared and coated after installation shall be installed prior to surface preparation. Components that will be inaccessible after installation shall have the surfaces prepared and coated before installation. Motors, drive trains, and bearings shall be protected during surface preparation in accordance with the equipment manufacturer's recommendations.

All cut or sheared edges shall be ground smooth to a 1/8 inch minimum radius for all material 1/4 inch thickness and larger. For material thickness less than 1/4 inch all cut or sheared edges shall be ground smooth to a radius equal to 1/2 the material thickness. Grinding of rolled edges on standard shapes with a minimum radius of the 1/16 inch will not be required.

All ferrous metal surfaces shall have all welds ground smooth and free of all defects in accordance with NACE Standard SP0178, Appendix C, Designation C and sharp edges ground smooth, if not previously prepared in the shop. Instead of blending of the weld with the base metal as required by the NACE standard, it will be acceptable to furnish a welded joint that has a smooth transition of the weld to the base metal. All welds shall be ground smooth to ensure satisfactory adhesion of paint.

The cleaning methods and surface profiles specified herein are minimums, and if the requirements printed in the coating manufacturer's data sheets exceed the limits specified, the value printed on the data sheets shall become the minimum requirement.

3-1.02.01. Ferrous Metal Surfaces – Non-immersion Service. Ferrous metal surfaces, including fabricated equipment, in non-immersion service shall be cleaned to the degree recommended by the coating manufacturer for surfaces to be coated with coal tar epoxy, epoxy, and heat-resistant coatings, except galvanized surfaces. Surface preparation of ferrous metal surfaces in non-immersion service shall consist of abrasive blast cleaning to SSPC-SP6, and the

first application of coating shall be performed on the same day. If more surface area is prepared than can be coated in one day, the uncoated area shall be blast cleaned again to the satisfaction of Engineer. Surface profile shall be as recommended by coating manufacturer, but not less than 2.0 mils.

3-1.02.02. Ferrous Metal Surfaces - Immersion Service. Surface preparation of ferrous metal surfaces in immersion service shall consist of abrasive blast cleaning to at least SSPC-SP10 and the first application of coating shall be performed on the same day. If more surface area is prepared than can be coated in one day, the uncoated area shall be blast cleaned again to the satisfaction of Engineer. Surface profile shall be as recommended by coating manufacturer, but not less than 3.5 mils.

3-1.03. Concrete Surfaces. All concrete surfaces shall be free of objectionable substances and shall meet the coating manufacturer's recommendations for surface preparation. Concrete surfaces shall be prepared in accordance with SSPC-SP13/NACE 6. Any other surface preparation recommended by the coating material manufacturer shall be brought to Engineer's attention and may be incorporated into the work if acceptable to Engineer.

All concrete surfaces shall be dry when coated and free from dirt, dust, sand, mud, oil, grease, and other objectionable substances. Oil and grease shall be completely removed by use of solvents or detergents before mechanical cleaning is started.

New concrete shall have cured for at least 4 weeks before coating is applied as recommended by the material manufacturer. Concrete surfaces shall be tested for capillary moisture in accordance with ASTM D4263. There shall be no capillary moisture when coatings are applied on concrete.

All surfaces to be coated shall be cleaned in accordance with ASTM D4258 and abraded in accordance with ASTM D4259. Surface profile shall be at least 25 percent of the dry film thickness specified for the coating system. Prior to application of the coating, the surfaces shall be thoroughly washed or cleaned by air blasting to remove all dust and residue. Spalled areas, voids, and cracks shall be repaired in accordance with the Concrete section and as acceptable to the Engineer. Fins and other surface projections shall be removed to provide a flush surface before application of coating.

Except where epoxy is applied as damp-proofing, the concrete surfaces, including those with bug holes less than 1 inch in any dimension, shall be prepared as recommended by the manufacturer, using an epoxy concrete filler and surfacer. Where coating with a vinyl ester the concrete filler and surfacer shall be as recommended by the manufacturer to be compatible with vinyl ester.

3-1.04. Concrete Block Surfaces. Voids and openings in concrete block surfaces shall be pointed. All exposed exterior surfaces and surfaces to be coated with epoxy, including the joints, shall be filled so that a continuous unbroken coating film is obtained.

3-1.05. Copper Tubing. All flux residue shall be removed from joints in copper tubing. Immediately before coating is started, tubing shall be wiped with a clean rag soaked in xylol.

3-1.06. Plastic Surfaces. All wax and oil shall be removed from plastic surfaces that are to be coated, including PVC and FRP, by wiping with a solvent compatible with the specified coating.

3-1.07. Hardware. Hardware items such as bolts, screws, washers, springs, and grease fittings need not be cleaned prior to coating if there is no evidence of dirt, corrosion, or foreign material.

3-1.08. Aluminum. When a coating system is required, remove all oil or deleterious substance with neutral detergent or emulsion cleaner or blast lightly with fine abrasive.

3-1.09. Stainless Steel. When a coating system is required, surface preparation shall conform to the coating manufacturer's recommendations.

3-2. MIXING AND THINNING. Coating shall be thoroughly mixed each time any is withdrawn from the container. Coating containers shall be kept tightly closed except while coating is being withdrawn.

Coating shall be factory mixed to proper consistency and viscosity for hot weather application without thinning. Thinning will be permitted only as necessary to obtain recommended coverage at lower application temperatures. In no case shall the wet film thickness of applied coating be reduced, by addition of coating thinner or otherwise, below the thickness recommended by the coating manufacturer. Thinning shall be done in compliance with all applicable air quality regulations.

3-3. APPLICATION. Coating shall be applied in a neat manner that will produce an even film of uniform and proper thickness, with finished surfaces free of runs, sags, ridges, laps, and brush marks. Each coat shall be thoroughly dry and hard before the next coat is applied. Each coat shall be a different color, if available. In no case shall coating be applied at a rate of coverage greater than the maximum rate recommended by the coating manufacturer.

Coating failures will not be accepted and shall be entirely removed down to the substrate and the surface recoated. Failures include but are not limited to sags, checking, cracking, teardrops, fat edges, fisheyes, or delamination.

3-3.01. Priming. Edges, corners, crevices, welds, and bolts shall be given a brush coat (stripe coat) of primer before application of the primer coat. The stripe coat shall be applied by a brush and worked in both directions. Special attention shall be given to filling all crevices with coating. When using zinc primers the stripe coat shall follow the initial prime coat.

Abraded and otherwise damaged portions of shop-applied coating shall be cleaned and recoated as recommended by the manufacturer of the finish coating. Welded seams and other uncoated surfaces, heads and nuts of field-installed bolts, and surfaces where coating has been damaged by heat shall be given a brush coat of the specified primer. Before the specified spot or touchup coating of metal surfaces, edges, corners, crevices, welds, and bolts in the area of the spot or touchup coating shall be given a brush coat of primer. This patch, spot, or touchup coating shall be completed, and the paint film shall be dry and hard, before additional coating is applied.

3-3.02. Epoxy. When used, epoxy shall be applied in accordance with the coating manufacturer's recommendations, including temperature limitations and protection from sunlight until top-coated.

When concrete is to be coated, coatings shall not be applied to concrete surfaces in direct sunlight or when the temperature of the concrete is rising. Preferably the coating shall be applied when the temperature of the concrete is dropping.

When applying high build epoxy coatings with a roller or brush and where a dry film thickness of at least 4-6 mils per coat is required, two or more coats shall be applied to achieve the recommended dry film thickness equal to a spray applied coating.

3-3.03. Coal Tar Epoxy. When used, the application of coal tar epoxy, including time limits for recoating, shall conform to the recommendations of the coating manufacturer.

When concrete is to be coated, coatings shall not be applied to concrete surfaces in direct sunlight or when the temperature of the concrete is rising. Preferably the coating shall be applied when the temperature of the concrete is dropping.

3-3.04. Vinyl Ester. When used, the application of vinyl ester coating system, including time limits for recoating and temperature requirements of the materials, shall conform to the recommendations of the coating manufacturer.

3-3.05. Film Thickness. The total coating film thickness including intermediate coats and finish coat, shall be not less than the following:

Type of Coating	Minimum Dry Film Thickness
Medium consistency coal tar	20 mils.
Coal tar epoxy (two coats)	20 mils.
Epoxy	
Floors (two coats)	10 mils.
Surfaces with first coat of epoxy and final coat of aliphatic polyurethane	7 mils (5 mils DFT for epoxy plus 2 mils DFT for aliphatic polyurethane).
Surfaces with first and second coat of epoxy and final coat of aliphatic polyurethane	12 mils (10 mils DFT for epoxy plus 2 mils DFT for aliphatic polyurethane).
Other surfaces (two coats)	10 mils.
Immersion service (three coats)	15 mils.
Flake-filled epoxy (two coats)	30 mils.
Vinyl ester	30 mils.
Zinc, epoxy, polyurethane	
Surfaces with first coat of zinc, intermediate coat of epoxy, and final coat of aliphatic polyurethane	10 mils, 3 mils zinc, 5 mils epoxy, plus 2 mils for aliphatic polyurethane.
Heat-resistant (silicone)	3 mils.
High heat-resistant (silicone)	3 mils.
Other (one coat)	5 mils.
Other (two coats)	10 mils.

3-3.06. Weather Conditions. Coatings shall not be applied, except under shelter, during wet, damp, or foggy weather, or when windblown dust, dirt, debris, or insects will collect on freshly applied coating.

Coatings shall not be applied at temperatures lower than the minimum temperature recommended by the coating manufacturer, or to metal surfaces such as tanks or pipe containing cold water, regardless of the air temperature, when metal conditions are likely to cause condensation. When necessary for proper application, a temporary enclosure shall be erected and kept heated until the coating has fully cured.

Coatings shall not be applied at temperatures higher than the maximum temperature recommended by the coating manufacturer. Where coatings are applied during periods of elevated ambient temperatures, Contractor and the coatings manufacturer shall be jointly responsible to ensure that proper application is performed including adherence to all re-coat window requirements. Precautions shall be taken to reduce the temperature of the surface application, especially for metal, at elevated temperatures above 100°F including shading application area from direct sunlight, applying coating in the evening or at night, and ventilating the area to reduce the humidity and temperature,

Vinyl ester coating materials, when required, shall be maintained during transportation, storage, mixing, and application at the temperature required by the coating manufacturer, 35°F to 90°F.

3-4. REPAIRING FACTORY FINISHED SURFACES. Factory finished surfaces damaged prior to acceptance by Owner shall be spot primed and recoated with materials equivalent to the original coatings. If, in the opinion of Engineer, spot repair of the damaged area is not satisfactory, the entire surface or item shall be recoated.

3-5. PROTECTION OF SURFACES. Throughout the work Contractor shall use drop cloths, masking tape, and other suitable measures to protect adjacent surfaces. Contractor shall be responsible for correcting and repairing any damage resulting from its or its subcontractors' operations. Coatings spilled or spattered on adjacent surfaces which are not being coated at the time shall be immediately removed. Exposed concrete or masonry not specified to be coated which is damaged by coatings shall be either removed and rebuilt or, where authorized by Owner, coated with two coats of masonry coating.

3-6. FIELD QUALITY CONTROL. The following inspection and testing shall be performed: surface profile, visual inspection, and wet and dry film thickness testing. All inspection and testing shall be witnessed by Engineer.

3-6.01. Surface Profile Testing. The surface profile for ferrous metal surfaces shall be measured for compliance with the specified minimum profile. The surface profile for concrete shall comply with SSPC 13/NACE 6 Table 1 for severe service.

3-6.02. Visual Inspection. The surface of the protective coatings shall be visually inspected.

3.6.03. Film Thickness. Coating film thickness shall be verified by measuring the film thickness of each coat as it is applied and the dry film thickness of the entire system. Wet film thickness shall be measured with a gauge that will measure the wet film thickness within an accuracy of ±0.5 mil. Dry film thickness shall be measured in accordance with SSPC-PA 2.

3-6.04. Spark Testing. Not required.

3-6.05. Adhesion Testing. Not required.

3-7. FIELD PRIMING SCHEDULE. In general, steel and cast iron surfaces of equipment are specified to be shop primed. Any such surfaces which have not been shop primed shall be field primed. Damaged or failed shop coatings which have been determined unsuitable by Engineer shall be removed and the surfaces shall be field coated, including prime coat (if any). Galvanized, aluminum,

stainless steel, and insulated surfaces shall be field primed. Primers used for field priming, unless otherwise required for repair of shop primers, shall be:

Surface To Be Primed	Material
Equipment, surfaces to be coated with	
Aliphatic polyurethane	Universal primer.
Epoxy	Same as finish coats.
Coal tar coating	Same as finish coats.
Vinyl ester	Same as finish coats.
Steel and cast iron, surfaces to be coated with	
Epoxy	Same as finish coats or inorganic zinc.
Coal tar coating	Same as finish coats.
Aluminum	Epoxy.
Galvanized	Epoxy.
Copper	Epoxy.
Stainless steel	Epoxy.
Plastic surfaces, including PVC and FRP	Same as finish coats.
Insulated piping	As recommended by manufacturer of finish coats.
Concrete, surfaces to be coated with epoxy	
For damp-proofing	Epoxy.
For all other surfaces	Epoxy concrete filler and surfacer.
Concrete block exposed in exterior locations	Epoxy concrete block filler.
Concrete block to be coated with epoxy	Epoxy concrete block filler.

Unless otherwise recommended by the coating manufacturer or specified herein, priming will not be required on concrete, or concrete block, nor on metal surfaces specified to be coated with coal tar epoxy, and heat-resistant coatings. Concrete surfaces to be coated with epoxy shall be filled with epoxy concrete filler and surfacer so that a continuous film is obtained, except where concrete is damp-proofed with epoxy.

3-8. FINISH COATING SYSTEMS. The following schedule lists coatings systems and coating surface designations. See Article1-3 for a definition of the surface designations.

No.	Finish Coating Systems	Coating Surface Designation						
		A	C	E	F	G	H	P
1.	Epoxy – One coat	x			x	x		
2.	Epoxy – Two coats	x	x	x	x	x		x
3.	Epoxy / NSF – Two coats		x	x				
4.	Epoxy – Three coats	x	x	x				
5.	Epoxy / NSF – Three coats	x	x	x				
6.	Epoxy – First coat Aliphatic polyurethane – Finish coat	x	x	x	x	x		x
7.	Epoxy – First and second coat Aliphatic polyurethane – Finish coat	x	x	x	x	x		
8.	Universal primer – First coat Aliphatic polyurethane – Finish coat	x		x				
9.	Medium consistency coal tar – Two coats	x	x	x				
10.	Coal tar epoxy – Two coats	x	x	x				
11.	Vinyl ester – Two coats	x	x	x				
12.	Heat resistant – Two coats						x	
13.	High heat resistant – Two coats						x	
14.	Zinc primer – First coat Epoxy – Intermediate coat Aliphatic polyurethane – Final coat	x		x				
15.	Flake-filled epoxy	x		x				

3-8.01. Surfaces Not To Be Coated. Unless otherwise specified, the following surfaces shall be left uncoated:

Exposed aluminum, except ductwork.
Polished or finished stainless steel. Unfinished stainless steel, except flashings and counter flashings, shall be coated.
Nickel or chromium.
Galvanized surfaces, except piping, conduit, ductwork, and other items specifically noted.
Rubber and plastics, except as specified.
Exterior concrete.
FRP wastewater troughs.
Surfaces specified to be factory finished.

3-8.02. Shop Finishing. Items to be shop finished include the following. Shop finishing shall be in accordance with the coating manufacturer's recommendations.

a. All slide gates.
c. Other surfaces where blast cleaning cannot be or is not recommended to be performed in the field.
d. Other items as otherwise specified.

3-8.03. Field Coating. Items to be field coated include the following. Field coating shall be in accordance with the field priming schedule, the coating schedule, and the manufacturer's recommendations.

b. Surfaces not indicated to be shop finished and surfaces where blast cleaning can be performed in the field.
d. Other items as otherwise specified.

3-9. METAL SURFACES COATING SCHEDULE.

Surface To Be Coated	Finish Coating System
Non-galvanized and galvanized structural and miscellaneous steel exposed to view or to the elements in exterior locations.	A6 A7 A14
Non-galvanized and galvanized structural and miscellaneous steel exposed to view inside buildings.	A2
Steel handrails, steel floor plates, doors, door frames.	A8
Unless otherwise specified, pumps, motors, speed reducers, and other machines and equipment exposed to view.	E8
Elevator guiderails and structural steel in hoistway	A2
Heating and air conditioning units, convector covers, electrical equipment cabinets, and similar Items and equipment (unless factory finished) exposed to view.	E8
Surfaces of cranes and hoists exposed to view indoors.	E2 E8
Surfaces of cranes and hoists exposed to the elements outdoors.	E6 E7

Surface To Be Coated	Finish Coating System
Cast Iron and steel piping inside buildings, including piping to be insulated, valves, fittings, flanges, bolts, supports, and accessories, and galvanized surfaces after proper priming.	A2
Cast Iron and steel piping in immersion service including inside buildings, including valves, fittings, flanges, bolts, supports, and accessories, and galvanized surfaces after proper priming.	A4 A5
Cast Iron and steel piping above grade exposed to the elements and to view outdoors, including piping to be insulated, valves, fittings, flanges, bolts, supports, and accessories, and galvanized surfaces after proper priming.	A6 A7 A14
Copper pipe and tubing, including fittings and valves.	F1 F2
Copper pipe and tubing, including fittings and valves exposed to view in exterior locations.	F6 F7
Enclosed type screw pumping equipment, all iron and steel exterior surfaces exposed to UV except stainless steel, motors, and speed reducers.	E7
Open type screw pumping equipment, all iron and steel exterior surfaces exposed to UV except stainless steel, motors, and speed reducers.	E7
Open type screw pumping equipment, all iron and steel interior surfaces including the screw surfaces except stainless steel, motors, and speed reducers.	E4
Circular sludge collecting equipment and accessories, all Iron and steel parts except platform, walkway, walkway beams, motors and speed reducers, and other iron or steel parts above the walkway.	E4 E5 E15

Surface To Be Coated	Finish Coating System
Circular sludge collecting equipment platform, walkway, walkway beams, and other iron or steel parts and accessories above the walkway except motors and speed reducers.	E6 E7
Straight-line sludge collecting equipment and accessories, all iron and steel parts except motors, speed reducers, sprockets, chains, and stainless steel.	E4 E5
Basin launders, troughs, weir plates, and accessories.	A4 A5
Rapid mix equipment, all Iron and steel surfaces except stainless steel, motors, and speed reducers.	E4 E5
Surface aeration equipment, all Iron and steel surfaces except stainless steel, motors, and speed reducers.	E4
All metal surfaces, unless otherwise specified, which will be submerged or buried, all or in part, including valves, and scum baffles, and cast iron slide gates, but excluding piping laid in the ground.	E4 A10 E5
All fully or partially submerged surfaces of screening, grit removal, aeration mixing, and sludge mixing equipment.	E4 A10 E5
Sludge inlet hoppers lining.	E10
Miscellaneous castings, including manhole rings and covers, and manhole steps. (One coat, if not shop coated.)	E2 A10 E3
Cast iron and steel piping in manholes, wetwells, grit basin, aeration basin, and similar locations, including valves fittings, flanges, bolts, supports, and accessories.	A4 A10 E5
Digester covers, all iron and steel parts that will be fully or partially submerged, exposed to sewage gas, or concealed inside; and digester mixing equipment.	E10 E11
Cast iron filter surface wash piping inside filter boxes, including fittings, bolts, and supports.	E5

Surface To Be Coated	Finish Coating System
Aluminum in contact with concrete.	F1
Aluminum and galvanized ductwork and conduit indoors.	F1 or G1 F2 or G2
Aluminum and galvanized ductwork and conduit exposed to elements outdoors.	F6 or G6 F7 or G7
Aluminum materials exposed to the elements outdoors.	F6 F7
Tilting weirs.	E4

3-10. CONCRETE AND MASONRY SURFACES COATING SCHEDULE. Not Used.

3-11. MISCELLANEOUS SURFACES COATING SCHEDULE. Not Used.

3-12. PIPING IDENTIFICATION SCHEDULE. Exposed piping and piping in accessible chases shall be identified with lettering or tags designating the service of each piping system, marked with flow directional arrows, and color coded.

Piping scheduled to be color coded shall be completely coated with the indicated colors, except surfaces specified to remain uncoated shall include sufficiently long segments of the specified color to accommodate the lettering and arrows. All other piping shall be coated to match adjacent surfaces, unless otherwise directed by Engineer.

3-12.01. Location. Lettering and flow direction arrows shall be provided on pipe near the equipment served, adjacent to valves, on both sides of wall and floor penetrations, at each branch or tee, and at least every 50 feet in straight runs of pipe. If, in the opinion of Engineer, this requirement will result in an excessive number of labels or arrows, the number required shall be reduced as directed.

3-12.02. Metal Tags. Where the outside diameter of pipe or pipe covering is 5/8 inch or smaller, aluminum or stainless steel tags shall be provided instead of lettering. Tags shall be stamped as specified and shall be fastened to the pipe with suitable chains. Pipe identified with tags shall be color coded as specified.

3-12.03. Lettering. Lettering shall be painted or stenciled on piping or shall be applied as snap-on markers. Snap-on markers shall be plastic sleeves, Brady "Bradysnap-On B-915", Seton "Setmark", or equal. Letter size shall be as follows:

Outside Diameter of Pipe or Covering	Minimum Height of Letters
5/8 inch and smaller	Metal tags -1/4 inch

Outside Diameter of Pipe or Covering	Minimum Height of Letters
3/4 to 4 inches	3/4 inch
5 inches and larger	2 inches

3-12.04. Color Coding and Lettering. All piping for the following services shall be color coded. Bands shall be 6 inches wide spaced along the pipe at 5 foot intervals. For services not listed, the color coding and lettering shall be as directed by the Engineer.

Piping Identification		
Service	**Color of Pipe**	**Color of Letters**
Activated Silica (solution)	Light brown with blue bands	White
Alum (solution)	Orange	Black
Ammonia	White	Black
Ash	Dark gray with green bands	White
Backwash waste	Light brown	White
Carbon	Black	White
Carbon Dioxide (liquid or gas)	Yellow with gray bands	Black
Carbon Dioxide (solution)	Yellow with black bands	Black
Chilled Water (supply or return)	Dark blue with red bands	White
Chlorine (gas, liquid, or vent)	Yellow	Black
Chlorine (solution)	Yellow	Black
Chlorine Dioxide	Yellow with violet bands	Black
Combustion Air	Dark green yellow bands	White
Compressed Air	Dark green	Black
Condensate	Light gray with brown bands	Black
Condenser Water (supply or return)	Dark blue with white bands	White
Digester Gas	Red with black bands	Black
Distilled Water	Light Blue with white bands	Red
Drain	Dark gray	White

Piping Identification		
Service	**Color of Pipe**	**Color of Letters**
Electrolyte	Aluminum with red bands	Black
Emergency Gas Treatment System – Indoors	Yellow with black bands	Black
Emergency Gas Treatment System – Outdoors	White	Black
Ferric Chloride	Orange	Black
Filtrate	Dark gray with red bands	White
Fire Protection Water	Red	White
Fluoride	Light blue with red bands	Black
Fuel Oil	Black	White
Gasoline	Black with red bands	White
Grease	Black with yellow bands	White
Grey Water	Purple	Black[1]
Grit	Light grey with black bands	White
Heated Sludge	Light brown with yellow bands	White
Heating Water (supply or return)	Light gray with black bands	Black
Hydrofluosilicic Acid	Yellow with blue bands	Black
Instrument Air	Light green with dark green bands	Black
Laboratory Special Gases	Match adjacent surface	Black
Laboratory Vacuum	Dark green with light green bands	Red
Lime Sludge	Light brown with white bands	White
Lime Slurry	Light green	Black
Liquid Alum	Yellow with orange bands	Black
Low Pressure Air (aeration supply)	Light green with orange bands	Black
Natural Gas Or Propane Gas	Yellow with red bands	Black

Piping Identification		
Service	**Color of Pipe**	**Color of Letters**
Nonpotable Water (downstream of backflow preventer)	Purple	Black[2]
Odor Control – Indoors	Dark green with light brown bands	White
Odor Control – Outdoors	White	Black
Oil – Hydraulic	Black with white bands	White
Other Hydrocarbons (identify)	Black	White
Ozone	Yellow with orange bands	Black
Plant Effuent Water	Purple	Black[3]
Plumbing Vents	Dark gray	White
Polymer	Orange with green bands	Black
Polyphosphate	Light green with red bands	Black
Potable Water (hot or cold)	Dark blue	White[4]
Potassium Permanganate	Violet	Black
Raw Water	Olive green	White
Refrigerant	Yellow with white bands	Black
Sample	Light gray with green bands	Black
Scum	Dark brown	White
Service Water	Dark blue with red bands	White
Settled Sewage	Light gray with brown bands	Black
Settled Sewage Service Water	Dark blue with orange bands	White
Settled Water	Aqua	Black
Sewage	Dark gray	Black
Sludge	Dark brown	White
Soda Ash (solution)	Light green with orange bands	Black
Sodium Chlorite	Orange with red bands	Black
Sodium Hydroxide (caustic)	Yellow with green bands	Black

Piping Identification		
Service	**Color of Pipe**	**Color of Letters**
Sodium Silica (solution)	Light brown with orange bands	White
Steam	Light gray with orange bands	Black
Steam Vent	Light gray with red bands	Black
Sulfur Dioxide	Light green with yellow bands	Black
Sulfur Dioxide (solution)	Orange with blue bands	Black
Sulfuric Acid	Yellow with red bands	Black
Vacuum Pump Discharge	Aluminum	Black

Notes:

1. Lettering shall read, “CAUTION: NONPOTABLE WATER, DO NOT DRINK.”.
2. Lettering shall be on a yellow background and shall read, “CAUTION: NONPOTABLE WATER, DO NOT DRINK.”. Each outlet on the nonpotable water line shall be similarly labeled.
3. Lettering shall read, “CAUTION: RECLAIMED WATER, DO NOT DRINK”.
4. Lettering shall be on a light green background.

Electrical conduit shall be coated to match adjacent ceiling or wall surfaces as directed by Engineer. Vent lines shall be coated to match surfaces they adjoin.

In addition, special coating of the following items will be required:

Item	Color
Valve handwheels and levers	Red
Hoist hooks and blocks	Yellow and black stripes

Numerals at least 2 inches high shall be painted on or adjacent to all accessible valves, pumps, flowmeters, and other items of equipment which are identified on the Drawings or in the Specifications by number.

End of Section

SURFACE DESCRIPTION	SYSTEM NO. -

SURFACE PREPARATION DESCRIPTION
☐ Solvent SSPC-SP1
☐ Ferrous Metal Nonimmersion SSPC-SP6
☐ Ferrous Metal Immersion
☐ SSPC-SP10
☐ SSPC-SP-5
☐ Other

COATING	DFT mils [µm]	MANUFACTURER AND PRODUCT
First Coat (Primer)		
Second Coat		
Third Coat		
Total System		Not less than minimum thickness specified.

Notes: (Attached if needed.)

Project:		
Coatings Manufacturer:		Initials _____
Painting Applicator:		Initials _____
BLACK & VEATCH	COATING SYSTEM DATA SHEET	Fig 1-09940

SHOP PRIMED SURFACE DESCRIPTION	SYSTEM NO. - -F

SURFACE PREPARATION DESCRIPTION
☐ Solvent SSPC-SP1 ☐ Other:

COATING	DFT mils [µm]	MANUFACTURER AND PRODUCT
Shop (Primer)		(Identify Product/Type)
Touchup		
Intermediate Coat		
Finish Coat		
Total System		Not less than minimum thickness specified.

Notes: (Attached if needed.)

Project:		
Coatings Manufacturer:		Initials _____
Painting Applicator:		Initials _____
BLACK & VEATCH	COATING SYSTEM DATA SHEET	Fig 2-09940

Section 11150

SUBMERSIBLE PUMPS

PART 1 - GENERAL

1-1. SCOPE. This section covers furnishing pedestal-mounted, single-stage, submersible, non-clog, end suction centrifugal pumping units and controls as indicated herein or on the Drawings.

Pump application.	Small Deep Well Injection
Number of pumps.	1
Pump tag numbers.	P-6-2-3
Pump location.	Deep Well Injection Pump Room

Each pumping unit shall be complete with a close-coupled, submersible electric motor, adjustable frequency drive and all other appurtenances specified, or otherwise required for proper operation.

Each pumping unit, including motor and all integral controls, shall be rated and labelled for use in a Non-Hazardous area as defined by the National Electric Code.

1-2. GENERAL. Equipment furnished under this section shall be fabricated and assembled in full conformity with Drawings, Specifications, engineering data, instructions, and recommendations of the equipment manufacturer, unless exceptions are noted by Engineer. Hydraulic considerations and definition of terms shall be as set forth in the Hydraulic Institute Standards.

1-2.01. General Equipment Stipulations. The General Equipment Stipulations shall apply to all equipment furnished under this section. If requirements in this specification differ from those in the General Equipment Stipulations, the requirements specified herein shall take precedence.

1-2.02. Seismic Design Requirements. Seismic design requirement for products specified herein shall be as indicated in the Meteorological and Seismic Design Criteria section.

1-2.03. Tagging. Each item of equipment and each part shipped separately shall be tagged and identified with indelible markings for the intended service. Tag numbers shall be clearly marked on all shipping labels and on the outside of all containers.

1-2.04. Power Supply. Unless otherwise indicated, power supply to the equipment shall be 480 volts, 60 Hz, 3 phase.

1-2.05. Identification. Pumps shall be identified in accordance with the Equipment and Valve Identification section.

1-3. SUBMITTALS.

1-3.01. Drawings and Data. Complete fabrication and assembly drawings, together with detailed specifications and data covering materials, parts, devices, and accessories forming a part of the equipment furnished, shall be submitted in accordance with the Submittals Procedures section. The data and specifications for each unit shall include, but shall not be limited to, the following:

Pumps

- Name of manufacturer.
- Type and model.
- Tag number.
- Pump designation.
- Pump location.
- Rotative speed.
- Size of suction nozzle.
- Size of discharge nozzle.
- Net weight of pump and motor only.
- Net weight with pedestal, when specified.
- Complete performance curves showing capacity versus head, NPSH required, pump efficiency, wire-to-water efficiency, and pump input power.
- Data on shop painting.

Motors

- Name of manufacturer.
- Type and model.
- Type of bearings and method of lubrication.
- Rated size of motor, hp , and service factor.
- Insulation class and temperature rise.
- Full load rotative speed.
- Efficiency at full load and rated pump condition.
- Full load current.
- Locked rotor current.

Adjustable Frequency Drives

As specified in the Adjustable Frequency Drives section.

Control Components

Type and manufacturer.

Model.

Enclosure rating.

Published descriptive data on all components, indicating all specific characteristics and options.

Where liquid level sensors are provided, provide mounting details.

Seismic Design Requirements

Confirmation of compliance with the requirements of the Meteorological and Seismic Design Criteria section.

1-3.02. Operation and Maintenance Data and Manuals. Operation and maintenance manuals shall be submitted in accordance with the Submittals Procedures section. The operation and maintenance manuals shall be in addition to any instructions or parts lists packed with or attached to the equipment when delivered.

1-4. QUALITY ASSURANCE.

1-4.01. Balance. All rotating parts shall be accurately machined and shall be in as nearly perfect rotational balance as practicable. Excessive vibration shall be sufficient cause for rejection of the equipment. The mass of the unit and its distribution shall be such that resonance at normal operating speeds is avoided. In any case, the unfiltered vibration velocity, as measured at any point on the machine including top of motor, shall not exceed the maximum velocity as indicated in Figure 11.6.9.4 of the governing standard.

At any operating speed, the ratio of rotative speed to the critical speed of a unit or its components shall be less than 0.8 or more than 1.3.

1-5. SPARE PARTS. Spare parts shall be provided as follows:

Spare Parts	Quantity
Mechanical seals	1
Casing wearing rings	1
Casing wearing plates	1
Impeller wearing rings	1
Sets of motor bearings	1

Spare parts shall be suitably packaged with labels indicating the contents of each package. Spare parts shall be delivered to Owner as directed.

PART 2 - PRODUCTS

2-1. SERVICE CONDITIONS. Pump shall be designed for effluent deep well injection service.

The equipment provided under this section shall be suitable for the following service conditions:

Seismic design requirements.	See Meteorological and Seismic Design Criteria section	
Maximum ambient air temperature (dry pit).	104	°F
Maximum liquid temperature.	80	°F
Maximum solids concentration, by weight.	0.5	%
Pumps start and stop against a closed valve.	No	
Site elevation.	See Meteorological and Seismic Design Criteria section	

All equipment furnished shall be designed to meet all specified conditions and to operate satisfactorily at the elevation indicated.

2-2. PERFORMANCE AND DESIGN REQUIREMENTS. Pumping units shall be designed for the performance and design requirements as follows:

Pump tag numbers.	P-6-2-3	
Rated head.	108	ft
Capacity at rated head.	5,000	gpm
Operating head range for full speed continuous operation.	100 to 120	ft
Minimum shutoff head.	160	ft
Maximum nominal pump speed.	900	rpm

Pump tag numbers.	P-6-2-3	
Minimum head at reduced speed.	96	ft
Capacity at minimum head at reduced speed.	2640	gpm
Approximate minimum pump speed, percent of maximum.	80	%
Maximum power required at pump input shaft at any point from minimum operating head to shutoff head.	200	bhp
Efficiency at rated head, wire to water.	71	%
Adjustable Frequency Drive losses included in the efficiency calculation	Yes	
Wetwell depth (guide-rail mounted).	N/A	ft
Minimum liquid depth in wetwell (guide-rail and skid mounted)	N/A	ft
Pump designed for reverse rotation at rated head.	Yes	
Minimum NSPHA at rated head.	35	ft
Maximum vibration velocity.	HIS	in/s
Minimum pump suction nozzle size (pedestal mounted).	16	in
Minimum pump discharge nozzle/elbow size.	12	in
Minimum test sphere diameter.	2	in

All specified conditions shall be at rated speed unless otherwise indicated.

Overall (wire-to-water) efficiency for variable speed pumps shall include losses in the pump, motor, and if required, adjustable frequency drive, and any transformers supplied as part of the adjustable frequency drive equipment.

The minimum hydrostatic test pressure shall be 1.5 times shutoff head plus max suction pressure.

Pump performance shall be stable and free from cavitation and noise throughout the specified operating head range at minimum suction submergences. The design running clearance between the impeller inlet and the casing wearing ring (if provided) shall be not less than 0.01 inch or 1 mil per inch of casing wearing ring diameter, whichever is greater.

Pumping units shall be designed so that maximum reverse rotation due to reverse flow at rated head will not cause damage to any component. Pump supplier shall coordinate this provision with the motor supplier.

2-3. MATERIALS.

Stator Housing, Oil Chamber Housing, Impeller Casing, and Impeller	Cast iron, ASTM A48.
Casing Wearing Ring	Martensitic stainless steel, Brinell 300+.
Impeller Wearing Ring	Martensitic stainless steel, Brinell 200-250.
Shaft	Alloy steel, hard chrome plated; or martensitic stainless steel, AISI Type 416 or 420.
Mechanical Seals	2 tandem single type, oil lubricated with silicon or tungsten carbide seal rings at all points, except the upper rotating seal, which shall be carbon.
Pedestal Base	Cast iron or fabricated steel.
Epoxy Coating	
Primer & Finish Coat	Carboline "Carboguard 891" or Tnemec "Series N140 Pota-Pox Plus".

2-4. PUMP CONSTRUCTION.

2-4.01. Impeller Casing. The impeller casing shall have well-rounded water passages and smooth interior surfaces free from cracks, porosity, blowholes, or other irregularities. The discharge nozzle shall be flanged, with dimensions and drilling conforming to ANSI B16.1, Class 125.

2-4.02. Impeller. The impeller shall be an enclosed one-piece casting with not more than two nonclog passages. The interior water passages shall have uniform sections and smooth surfaces and shall be free from cracks and porosity. The impeller shall be dynamically balanced and securely locked to the shaft by means of a key and self-locking bolt or nut.

2-4.03. Wearing Rings. Renewable wearing rings shall be provided in the casing and on the impeller.

For pumping units 100 hp and larger, renewable wearing rings shall be provided in the casing and on the impeller. The rings shall be positively locked in place.

2-4.04. Oil Chamber Housing. The oil chamber shall contain a drain plug and a vent plug. Food grade oil shall be used.

2-4.05. Mechanical Seals. Each pump shall be provided with two mechanical rotating shaft seals arranged in tandem and running in an oil chamber. Each interface shall be held in contact by an independent spring system designed to withstand maximum suction submergence. The seals shall require neither maintenance nor adjustment and shall be readily accessible for inspection and replacement.

Shaft seals lacking positively driven rotating members or conventional double mechanical seals which utilize a common single or double spring acting between the upper and lower units and requiring a pressure differential to offset external pressure and effect sealing, will not be acceptable. The seals shall not rely upon the pumped media for lubrication and shall not be damaged if the pumps are run unsubmerged for extended periods while pumping under load.

2-4.06. Sealing of Mating Surfaces. All mating surfaces of major components shall be machined and fitted with O-rings where watertight sealing is needed. Sealing shall be accomplished by O-ring contact on four surfaces and O-ring compression in two planes, without reliance on a specific fastener torque or tension to obtain a watertight joint. The use of elliptical O-rings, gaskets, or seals requiring a specific fastener torque value to obtain and maintain compression and watertightness will not be acceptable. The use of secondary sealing compounds, gasket cement, grease, or other devices to obtain watertight joints will not be acceptable.

2-4.07. Guiderail Mounted Base. Not used.

2-4.08. Pedestal Mounted Base. Unless otherwise indicated or specified, all equipment will be installed on concrete bases at least 6 inches high. Each pedestal mounted pump shall be mounted on a pedestal base extending from the impeller casing to below the bottom of the suction elbow inlet flange. All seams and contact surfaces between steel shapes and plates of fabricated steel pedestals shall be continuously welded and ground smooth. Each pedestal shall be suitable for grouting and bolting to the floor of the wetwell.

2-4.08.01. Suction Elbow. Each pedestal-mounted pump shall be provided with a flanged suction elbow complete with a cleanout handhole with contoured interior surfaces. The elbow may be integral with the pedestal base. The diameter and drilling of the inlet flange shall conform to ANSI B16.1, Class 125.

2-4.09. Skid Mounted Base. Not used.

2-4.10. Access Hatch Cover. Not used.

2-4.11. Shop Painting. All iron and steel parts which will be in contact with pumped liquid or submerged after installation, including the inside of the casing and the discharge elbow, shall be shop cleaned in accordance with the coating manufacturer's recommendations. The exterior of the pump shall be painted with the epoxy coating system specified. The coating shall have a dry film thickness of at least 10 mils and shall consist of a prime (first) coat and one or more finish coats. At least 1 quart of the finish coat material shall be furnished with each pump for field touch-up.

All iron and steel parts inside the pump, including the surfaces of cast iron impellers, shall be painted with a suitable rust protective coating to protect the impeller during shipment, storage, and installation.

The shop painting of other surfaces shall be in accordance with the shop painting requirements in the General Equipment Stipulations.

For potable water applications, all coatings shall be NSF approved.

2-4.12. Hoist Assembly. Not used.

2-5. ELECTRIC MOTORS. Each pump shall be driven by an air-filled, totally submersible electric motor provided by the pump manufacturer. Motor nameplate rating shall exceed the maximum power required by the pump in the operating head range. Each motor shall be rated for the power supply provided to the pump, and shall have a service factor of 1.15. The stator housing shall be an air-filled, watertight casing. A cooling jacket shall encase the motor housing for each pump where needed to maintain adequate cooling. The cooling jacket shall require no external source of cooling water. Motor insulation shall be moisture resistant, Class H, 155°C. Each motor shall be NEMA Design B for continuous duty at 40°C ambient temperature, and designed for at least 10 starts per hour.

The motor bearings shall be antifriction, permanently lubricated type. The lower bearing shall be fixed to carry the pump thrust and the upper bearing free to move axially. The bearings shall have a calculated ABMA L_{10} Life Rating of

40,000 hours when operating at maximum operating head. Maximum shaft runout at the mechanical seals shall not exceed 2 mils at any point in the operating head range.

Each motor installed in a drypit shall be capable of continuous operation in air under pump full load and reduced speed conditions, without exceeding the temperature rise limits for the motor insulation system.

Each pump shall be equipped with one or more multiconductor cable assemblies for power and control. Each multiconductor assembly containing power cables shall be provided with a separate grounding conductor. Each cable assembly shall bear a permanently embossed code or legend indicating the cable is suitable for submerged use. Cable sizing shall conform to NEC requirements.

All cables for drywell mounted pumps shall be of sufficient length to terminate in a junction box as indicated on the Drawings, with 10 feet of slack which will be coiled at the motor.

The cable entry water seal shall include a strain relief and a grommet type seal designed so that a specific fastener torque is not required to ensure a watertight, submersible seal. The cable entry junction box and motor shall be separated by a stator lead sealing gland or a terminal board. The junction box shall isolate the motor interior from moisture gaining access through the top of the stator housing.

Motors shall be specifically selected for service with an adjustable frequency type speed controller and shall be derated to compensate for harmonic heating effects and reduced self-cooling capability at low speed operation so that the motor does not exceed Class B temperature rise when operating in the installed condition at load with power received from the adjustable frequency drive. All motors driven by adjustable frequency drives shall be supplied with full phase insulation on the end turns and shall meet the requirements of NEMA MG 1, Part 31. In addition to the requirements of NEMA MG 1, Part 31, motors shall be designed to be continually pulsed at the motor terminals with a voltage of 1600 volts ac.

2-5.01. Adjustable Frequency Drives. Adjustable frequency drives shall be provided and shall be coordinated with the requirements of the pumping unit. The pump manufacturer shall be responsible for furnishing the adjustable frequency drive, for matching the motor and the drive, and for coordinating the collection of data and the design to limit harmonics to the levels specified.

Adjustable frequency drives shall be design as specified in the Adjustable Frequency Drives section.

2-6. CONTROLS.

2-6.01. Liquid Level Sensors. Not used.

2-6.02. Pump Controls. Each motor shall be protected by one motor temperature switch embedded in each phase winding. Each switch shall be designed to operate at 140°C (± 5°C). Each switch shall be normally closed automatic reset type rated 5 amps at 120 volts ac. The switches shall be wired in series with end leads wired to terminals withiAn the motor housing.

Thrust bearings shall be protected by bearing temperature switches. The switches shall be normally closed automatic reset type rated 5 amps at 120 volts ac.

2-7. SHOP TESTS. Each pump shall be tested at the factory for capacity, power requirements, and efficiency at specified rated head, shutoff head, operating head extremes, and at as many other points as necessary for accurate performance curve plotting. All tests and test reports shall be made in conformity with the requirements and recommendations of the Hydraulic Institute Standards. Acceptance testing shall be per Table 11.6.5.4 Grade 1U, with no minus tolerance or margin allowed.

For pumping units with adjustable frequency drives, the wire-to-water efficiency test shall include the adjustable frequency drive (and isolation transformers if supplied with the adjustable frequency drive) to be installed in the work.

Five certified copies of a report covering each test shall be prepared by the pump manufacturer and delivered to Engineer not less than 10 days prior to the shipment of the equipment from the factory. The report shall include data and test information as stipulated in the Hydraulic Institute Standards, copies of the test log originals, test reading to curve conversion equations, and certified performance curves. The curves shall include head, bhp , pump efficiency, and shop test NPSH available, plotted against capacity. The curves shall be easily read and plotted to scales consistent with performance requirements. All test points shall be clearly shown.

PART 3 - EXECUTION

3-1. INSTALLATION. Each pumping unit shall be installed in accordance with the Hydraulic Institute Standards, the Equipment Installation section, and as specified herein.

The equipment base for dry pit type pumping units shall be grouted after initial fitting and alignment, but before final bolting of connecting piping. Special care shall be taken to maintain alignment of pumping unit components. No stresses

shall be transmitted to the pump flanges. After final alignment and bolting, connections to pumping equipment shall be tested for applied piping stresses by loosening the flange bolts. If any movement or opening of the joints is observed, piping shall be adjusted to proper fit.

Control cables shall be supported to prevent tension and damage. Mounting of cable supports in wetwells shall be coordinated by the pump supplier.

3-2. FIELD QUALITY CONTROL.

3-2.01. Installation Check. An experienced, competent, and authorized representative of the manufacturer shall visit the site of the Work and inspect, check, adjust if necessary, and approve the equipment installation. The representative shall be present when the equipment is placed in operation in accordance with Section 01650, Startup Requirements, and shall revisit the job site as often as necessary until all trouble is corrected and the equipment installation and operation are satisfactory in the opinion of Engineer.

The manufacturer's representative shall furnish a written report certifying that the equipment has been properly installed and lubricated; is in accurate alignment; is free from any undue stress imposed by connecting piping or anchor bolts; and has been operated under full load conditions and that it operated satisfactorily.

All costs for these services shall be included in the contract price.

3-2.02. Installation Supervision. Installation supervision by the manufacturer is not required.

3-2.02. Field Vibration Tests. Not Used.

End of Section

Section 15010

Valve Installation

PART 1 - GENERAL

1-1. SCOPE. This section covers the installation of new valves and actuators provided as part of this Contract.

Cleaning, disinfection, pressure and leakage testing, insulation, and pipe supports are covered in other sections.

The following specification sections are applicable to valves to be installed:

Title
Industrial Butterfly Valves

1-2. GENERAL. Equipment installed under this section shall be erected and placed in proper operating condition in full conformity with Drawings, Specifications, engineering data, instructions, and recommendations of the equipment manufacturer, unless exceptions are noted by Engineer.

1-2.01. Coordination. When manufacturer's field services or installation check services are provided by the valve manufacturer, Contractor shall coordinate the services with the valve manufacturer. Contractor shall give Engineer written notice at least 30 days prior to the need for manufacturer's field services.

Flanged, push-on, and grooved connections to valves including the bolts, nuts, and gaskets are covered in the appropriate pipe specification section. Valve ends shall match piping.

PART 2 - PRODUCTS – Not used.

PART 3 - EXECUTION

3-1. INSPECTION. All valves and accessories shall be inspected for damage and cleanliness before being installed. Any material damaged or contaminated in handling on the job shall not be used unless it is repaired and re-cleaned to the original requirements by Contractor. Such material shall be segregated from the clean material and shall be inspected and approved by Owner or his representative before its use.

3-2. INSTALLATION.

3-2.01. General. Valves shall be installed with sufficient clearance for proper operation of any external mechanisms, and with sufficient clearance to dismantle the valve for in-place maintenance. Installation shall be in accordance with the valve manufacturer's recommendations.

Unless otherwise indicated on the Drawings or specified, all valves installed in horizontal runs of pipe having centerline elevations 4 feet 6 inches or less above the finish floor shall be installed with their operating stems vertical. Valves installed in horizontal runs of piping having centerline elevations between 4 feet 6 inches and 6 feet 9 inches above the finish floor shall be installed with their operating stems horizontal. If adjacent piping prohibits this, the stems and operating handwheel shall be installed above the valve horizontal centerline as close to horizontal as possible. Valves installed in vertical runs of pipe shall have their operating stems oriented to facilitate the most practicable operation, as reviewed by Engineer.

3-2.02. Installation Checks. When specified in the valve sections, the valve manufacturer will provide installation checks. For installation checks, the manufacturer's field representative will inspect the valve installation immediately following installation by Contractor. The manufacturer's representatives will revisit the site as often as necessary to ensure installation satisfactory to Owner.

3-2.03. Butterfly Valves. Butterfly valves shall be installed with the shaft horizontal unless otherwise necessary for proper operation or as acceptable to Engineer.

Whenever an actuator must be removed to permit installation of a valve, the actuator shall be promptly reinstalled and shall be inspected and readjusted by a representative of the valve manufacturer.

3-2.04. Check Valves.

3-2.05. Plug Valves. Not used.

3-2.06. Resilient Seated Gate Valves. Not used.

3-2.07. Air Release and Combination Air Valves. Not used.

3-2.08. Hydrants. Not used.

3-2.09. Valve Boxes. Not used.

3-2.10. Air Control Valves. Air control valves shall be installed following the manufacturer's recommendations.

Whenever an actuator must be removed to permit installation of a valve, the actuator shall be promptly reinstalled and shall be inspected and readjusted by a representative of the valve manufacturer.

3-3. VALVE ACTUATORS. Valve actuators and accessories shall be factory mounted on the valve, calibrated, and tested by the valve or actuator manufacturer.

3-4. FIELD QUALITY CONTROL.

3.4.01. Field Testing. After installation, all valves shall be tested in accordance with the Pipeline Pressure and Leakage Testing section.

3-4.01.01. Pressure Tests. Pressure testing shall be in accordance with the Pipeline Pressure and Leakage Testing section.

3-4.01.02. Leakage Tests. All valves shall be free from leaks. Each leak that is discovered within the correction period stipulated in the General Conditions shall be repaired by and at the expense of Contractor. This requirement applies whether pressure testing is required or not.

3-5. ADJUSTING. After installation, the opening and closing time shall be adjusted as needed for each pneumatic, hydraulic and electric actuated valve.

End of Section

Section 15020

MISCELLANEOUS PIPING AND ACCESSORIES INSTALLATION

PART 1 - GENERAL

1-1. SCOPE. This section covers the installation of piping and accessories as indicated on the Drawings.

Contractor shall furnish all necessary jointing materials, coatings, and accessories that are specified herein.

Pipe supports and anchors shall be furnished by Contractor, and are covered in the Pipe Supports section. Pipe trenching and backfilling are covered in the Trenching and Backfilling section.

1-2. GENERAL.

1-2.01. Coordination. Materials installed under this section shall be installed in full conformity with Drawings, Specifications, engineering data, instructions, and recommendations of the manufacturer, unless exceptions are noted by Engineer.

1-3. SUBMITTALS.

1-3.01. Drawings and Data. Complete specifications, data, and catalog cuts or drawings shall be submitted in accordance with the Submittals Procedures section. Items requiring submittals shall include, but not be limited to, the following:

Materials as specified herein.

1-3.02. Welder Certification. Prior to the start of the work, Contractor shall submit a list of the welders he proposes using and the type of welding for which each has been qualified. Copy of certification and identification stamp shall be submitted for each welder. Qualification tests may be waived if evidence of prior qualification is deemed suitable by Engineer.

1-3.03. Spool Drawings. Spool drawings indicating the complete line, showing all welded and assembly items, except for insulation shoes or nonstress-relieved lines, shall be developed and submitted for the following services:

Process Air Piping

1-4. QUALITY ASSURANCE.

1-4.01. Welding and Brazing Qualifications. All welding and brazing procedures and operators shall be qualified by an independent testing laboratory in accordance with the applicable provisions of Section IX of the ASME Code. All procedure and operator qualifications shall be submitted to the Engineer for review.

1-4.02. Tolerances. These tolerances apply to in-line items and connections for other lines.

The general dimension, such as face-to-face, face or end-to-end, face- or end-to center, and center-to-center shall be 1/8 inch .

The inclination of flange face from true in any direction shall not exceed 3/64 inch per foot .

Rotation of flange bolt holes shall not exceed 1/16 inch .

1-5. DELIVERY, STORAGE, AND HANDLING. Shipping shall be in accordance with the Product Delivery Requirements section. Handling and storage shall be in accordance with the Product Storage and Handling Requirements section. All materials shall be stored in a sheltered location above the ground, separated by type, and shall be supported to prevent sagging or bending.

Plastic pipe, tubing, and fittings shall be stored between 40°F and 90°F .

1-5.01. Coated Pipe. Handling methods and equipment used shall prevent damage to the protective coating and shall include the use of end hooks, padded calipers, and nylon or similar fabric slings with spreader bars. Bare cables, chains, or metal bars shall not be used. Coated pipe shall be stored off the ground on wide, padded skids. Plastic-coated pipe shall be covered or otherwise protected from exposure to sunlight.

PART 2 - PRODUCTS

2-1. SERVICE CONDITIONS. Pipe, tubing, and fittings covered herein shall be installed in the services indicated in the various pipe sections.

2-2. MATERIALS.

Threaded Fittings

Anti-Seize Thread Lubricant	Jet-Lube "Nikal", John Crane "Thred Gard Nickel", Never-Seez "Pure Nickel Special", or Permatex "Nickel Anti-Seize".
Teflon Thread Sealer	Paste type; Hercules "Real-tuff", John Crane "JC-30", or Permatex "Thread Sealant with Teflon".
Teflon Thread Tape	Hercules "Tape Dope" or John Crane "Thread-Tape".
Solvent Welded Fittings	
Solvent cement for PVC Systems	ASTM D2564.
Solvent cement for CPVC Systems	ASTM F493.
Sodium Hypochlorite, Sodium Hydroxide, and Sodium Bisulfite Service	IPS Corporation "Weld-On 724"
Primer for PVC Systems	ASTM F656.
Solder or Brazed Fittings	
Solder	Solid wire, ASTM B32, ANSI/NSF 61 certified, Alloy Grade Sb5, (95-5).
Soldering Flux	Paste type, ASTM B813.
Brazing Filler Metal	AWS A5.8, BCuP-5; Engelhard "Silvaloy 15", Goldsmith "GB-15", or Handy & Harman "Sil-Fos".
Brazing Flux	Paste type, Fed Spec O-F-499, Type B.
Insulating Fittings	
Threaded	Dielectric steel pipe nipple, ASTM A53, Schedule 40, polypropylene lined, zinc plated; Perfection Corp. "Clearflow Fittings". Fittings shall be suitable for the temperature and service.

Flanged	Epco "Dielectric Flange Unions" or Central Plastics "Insulating Flange Unions". Fittings shall be suitable for the temperature and service.
Pipe Insulation	See Mechanical Insulation section.
Watertight/Dusttight Pipe Sleeves	O-Z Electrical Manufacturing "Thruwall" and "Floor Seals", or Thunderline "Link-Seals"; with modular rubber sealing elements, nonmetallic pressure plates, and galvanized bolts.
Pipe Sleeve Sealant	Polysulfide or urethane, as specified on the Drawings.
Protective Coatings	
Tape Wrap	ANSI/AWWA C209, except single ply tape thickness shall not be less than 30 mils ; Protecto Wrap "200" or Tapecoat "CT".
Primer	As recommended by the tape manufacturer.
Coal Tar Epoxy	High-build coal tar epoxy; PPG Amercoat "Amercoat 78HB Coal Tar Epoxy", Carboline "Bitumastic 300 M", Tnemec "46H-413 Hi-Build Tneme-Tar", or Sherwin-Williams "Hi-Mil Sher-Tar Epoxy".

PART 3 - EXECUTION

3-1. INSPECTION. All piping components shall be inspected for damage and cleanliness before being installed. Any material damaged or contaminated in handling on the job shall not be used unless it is repaired and recleaned to the original requirements by Contractor. Such material shall be segregated from the clean material and shall be inspected and approved by Owner or his representative before its use.

3-2. PREPARATION.

3-2.01. Field Measurement. Pipe shall be cut to measurements taken at the site, not from the Drawings. All necessary provisions shall be made in laying out piping to allow for expansion and contraction. Piping shall not obstruct openings

or passageways. Pipes shall be held free of contact with building construction to avoid transmission of noise resulting from expansion.

3-3. INSTALLATION.

3-3.01. General. All instruments and specialty items shall be installed according to the manufacturer's instructions and with sufficient clearance and access for ease of operation and maintenance.

Flat faced wrenches and vises shall be used for copper tubing systems. Pipe wrenches and vises with toothed jaws will damage copper materials and shall not be used. Bends in soft temper tubing shall be shaped with bending tools.

3-3.02. Pipe Sleeves. Piping passing through concrete or masonry shall be installed through sleeves that have been installed before the concrete is placed or when masonry is laid. Pipe sleeves installed through floors with a special finish, such as ceramic or vinyl composition tile, shall be flush with the finished floor surface and shall be provided with nickel or chromium plated floor plates. Unless otherwise indicated on the Drawings, in all other locations where pipes pass through floors, pipe sleeves shall project not less than 1 inch nor more than 2 inches above the floor surface, with the projections uniform within each area. In the case of insulated pipes, the insulation shall extend through pipe sleeves. Where the Drawings indicate future installation of pipe, sleeves fitted with suitable plastic caps or plugs shall be provided.

Holes drilled with a suitable rotary drill will be considered instead of sleeves for piping which passes through interior walls and through floors with a special finish.

Unless otherwise indicated on the Drawings, all pipes passing through walls or slabs which have one side in contact with earth or exposed to the weather shall be sealed watertight with special rubber-gasketed sleeve and joint assemblies, or with sleeves and modular rubber sealing elements.

3-3.03. Pipe Joints. Pipe joints shall be carefully and neatly made in accordance with the indicated requirements.

3-3.03.01. Threaded. Pipe threads shall conform to ANSI/ASME B1.20.1, NPT, and shall be fully and cleanly cut with sharp dies. Not more than three threads at each pipe connection shall remain exposed after installation. Ends of pipe shall be reamed after threading and before assembly to remove all burrs. Unless otherwise indicated, threaded joints shall be made up with teflon thread tape, thread sealer, or a suitable joint compound.

Threaded joints in plastic piping shall be made up with teflon thread tape applied to all male threads. Threaded joints in stainless steel piping shall be made up with teflon thread sealer and teflon thread tape applied to all male threads.

Threaded joints in steel piping for chlorine service shall be made up with teflon thread tape or litharge and glycerine paste applied to all male threads.

3-3.03.02. Compression. Not Used.

3-3.03.03. Flared. Not Used.

3-3.03.04. Soldered and Brazed. Not Used.

3-3.03.05. Solvent Welded. Not Used.

3-3.03.06. Epoxy and Adhesive Bonded. Not Used.

3-3.03.07. Heat Fusion Bonded. Not Used.

3-3.03.08. Flanged. Flange bolts shall be tightened sufficiently to slightly compress the gasket and effect a seal, but shall not be torqued less than the minimum value required by the gasket manufacturer. Flange bolts shall not be so tight as to fracture or distort the flanges. A plain washer shall be installed under the head and nut of bolts connecting plastic pipe flanges. Anti-seize thread lubricant shall be applied to the threaded portion of all stainless steel bolts during assembly.

Flange bolt holes shall be oriented as follows, unless otherwise indicated on the spool drawings:

Vertical flange face:	Bolt holes to straddle the vertical centerlines.
Horizontal flange face:	Bolt holes shall be aligned with connecting pipe.

Pipe sealants, thread compounds, or other coatings shall not be applied to flange gaskets unless recommended by the gasket manufacturer for the specified service and approved by Engineer.

Welds at orifice flanges shall have internal surfaces ground smooth to the pipe wall.

Slip-on flanges shall be welded inside and outside. There shall be a distance of approximately 1/16 to 1/8 inch between the edge of the fillet weld and the face of the flange. The seal weld shall be applied so that the flange face shall be free of weld spatter and does not require refacing.

Flat-faced flanges shall be used when mating to Class 125 flanges. Full-face gaskets shall be used with flat-faced flanges and ring gaskets shall be used with raised faced flanges.

Weld neck flanges shall be used with butt-weld fittings. The bore of weld neck flanges shall match the pipe wall thickness.

Insulating joints connecting submerged (buried) piping to exposed piping shall be installed above the maximum water surface elevation and before the first pipe support not having coated anchor bolts or adhesive-bonded concrete anchors. All submerged (buried) metallic piping shall be isolated from the concrete reinforcement. Insulating flanges shall be tested for electrical isolation after installation and bolt-up but prior to introduction of conducting fluid.

3-3.03.09. Welded. Welding shall conform to the specifications and recommendations contained in the "Code for Pressure Piping", ANSI B31.1.

Weld cross-sections shall be equal to or greater than the pipe wall thickness. Welds shall be smooth and continuous and shall have interior projections no greater than 1/16 inch . Backing strips or rings shall not be used except with specific prior review by Engineer as to use, material, and design. Root gap inserts that are completely melted and consumed in the weld bead are acceptable only when reviewed in advance by Engineer.

Stainless steel welding shall be inert gas tungsten arc (TIG) or the direct current, straight polarity, inert gas metal arc process (MIG).

Carbon steel welding shall be made by the shielded metal arc process.

For socket weld joints, fully engage the two pipe ends, then separate them by 1/16 inch prior to welding to all space for shrinkage.

3-3.03.10. Grooved Couplings. Not Used.

3-3.03.11. Push-on. Not Used.

3-3.03.12. Rubber-Gasketed. Not Used.

3-3.03.13. Other Pipe Joints. Not Used.

3-3.04. Pipe. Pipe shall be installed as specified, as indicated on the Drawings, or, in the absence of detail piping arrangement, in a manner acceptable to Engineer.

Piping shall be installed without springing or forcing the pipe in a manner which would induce stresses in the pipe, valves, or connecting equipment.

Piping shall be supported in conformance with the Pipe Supports section.

Piping shall be connected to equipment by flanges or unions as specified in the various piping sections. Piping connecting to equipment shall be supported by a pipe support and not by the equipment.

Water, gas, and air supply piping shall be provided with a shutoff valve and union at each fixture or unit of equipment, whether or not indicated on the Drawings, to permit isolation and disconnection of each item without disturbing the remainder of the system. Air supply piping shall be provided with sectionalizing valves and valved air inlet connections as needed for isolation of portions of the system for periodic testing. Gas supply lines to buildings shall be provided with a shutoff valve and union located above grade immediately outside the building. A capped drip leg shall be provided at the bottom of the vertical riser of gas supply piping adjacent to gas-fired appliances.

A union shall be provided within 2 feet of each threaded-end valve unless there are other connections which will permit easy removal of the valve. Unions shall also be provided in piping adjacent to devices or equipment which may require removal in the future and where required by the Drawings or the Specifications.

All air piping shall be graded to points of drainage collection where drip legs and drain valves shall be provided. Air piping shall be sized for the service conditions, with the indicated minimum sizes:

Service	Minimum Size
Air signal	1/4 inch OD
Air supply	1/2 inch OD
Bubbler drop pipes	3/4 inch
Buried piping	3/4 inch

Taps for pressure gauge connections on the suction and discharge of pumping units shall be provided with a nipple and a ball type shutoff valve.

Drilling and tapping of pipe walls for installation of pressure gauges or switches will not be permitted.

In all piping, insulating fittings shall be provided to prevent contact of dissimilar metals, including but not limited to, contact of copper, brass, or bronze pipe, tubing, fittings, valves, or appurtenances, or stainless steel pipe, tubing, fittings, valves, or appurtenances with iron or steel pipe, fittings, valves, or appurtenances. Insulating fittings shall also be provided to prevent contact of copper, brass, or bronze pipe, tubing, fittings, valves or appurtenances with stainless steel pipe, tubing, fittings, valves, or appurtenances.

Branch connections in horizontal runs of steam, air, and gas piping shall be made from the top of the pipe.

Piping adjacent to flow sensors shall be installed in accordance with the requirements of the manufacturer of the flow sensor and commonly accepted design practices of the appropriate straight pipe runs both upstream and downstream.

Drains required for operation are shown on the Drawings. However, vents at all high points and drains at all low points in the piping that are required for complete draining for pressure test may not be shown on these Drawings. Contractor shall add such items as found to be necessary during detail piping design and/or piping installation.

3-3.05. Reducers. Eccentric reducers shall be installed flat on the bottom for steam, condensate return and digester gas services.

3-3.06. Valves. Isolation valves provided with equipment and instruments shall be located in a manner which will allow ease of access and removal of the items to be isolated. Prior to soldering or brazing valves, teflon and elastomer seats and seals shall be removed to prevent damage.

3-4. PIPING ASSEMBLY.

3-4.01. General. Contractor shall only use labor that has been qualified by training and experience to capably perform the specified activities required to accomplish the work in a satisfactory manner

Any deviations from the Specifications or piping locations shown on the Drawings require prior review and approval by Engineer.

3-4.02. Buttwelded Piping. The specification and qualification of weld joints and welders for buttwelded piping shall be in accordance with ASME Boiler Pressure Vessel Code, Section IX, Welding and Brazing. Weld procedure specifications (WPS) and procedure qualification reports (PQR) shall be submitted to Engineer for review and validation of joint design, efficiencies and strength before installation begins.

Nondestructive examination (NDE) shall be in accordance with the ASME Boiler and Pressure Vessel Code, Section V, Nondestructive Examination. The minimum level of NDE shall be as follows:

(1) 100 percent visual examination of welds by a qualified examiner (per ASME B31.1), and

(2) Radiographic testing (RT) of 10 percent random sampling of welds.

If the Contractor wants to use alternative techniques or intends to apply alternative methods considered equivalent to those indicated herein, a proposal on such techniques or methods shall be submitted in writing to Engineer for review and approval at least 14 days before intended date of use.

Welding shall not begin until weld joint and welder qualification submittals have been reviewed and approved. NDE shall be performed before the pressure and leakage testing of the piping. Weld acceptance standards shall be in accordance with ASME B31.1, Chapter VI. If a weld fails the NDE, it shall be repaired and the test repeated at no additional cost to the Owner.

3-5. PROTECTIVE COATING. Not Used.

3-6. PRESSURE AND LEAKAGE TESTING. All specified tests shall be made by and at the expense of Contractor in the presence, and to the satisfaction of Engineer. Each piping system shall be tested for at least 1 hour with no loss of pressure. The Contractor shall coordinate this section with the Pipeline Pressure and Leakage Testing section.

Compressed air or pressurized gas shall not be used for testing plastic piping unless specifically recommended by the pipe manufacturer.

Leakage may be determined by loss-of-pressure, soap solution, chemical indicator, or other positive and accurate method acceptable to Engineer. All fixtures, devices, or accessories which are to be connected to the lines and which would be damaged if subjected to the specified test pressure shall be disconnected and the ends of the branch lines plugged or capped as needed during the testing.

After completion of the specified pressure tests, all anhydrous ammonia, chlorine and sulfur dioxide gas piping shall be tested for leakage using the appropriate gas chemical at operating pressures. Piping shall be thoroughly cleaned and dried before admitting gas chemical into the system. Gas chemical shall be slowly admitted to the piping system.

For chlorine gas piping, leakage shall be checked by waving a swab soaked in aqua ammonia solution near each fitting. Ammonia solution shall not be applied directly to the fittings. Formation of white fumes will indicate the presence of leaks. All chlorine gas shall be purged from the line before leaks are repaired.

Unless otherwise required by the applicable codes, drainage and venting systems shall be air tested. For water testing, the drainage and venting system shall be filled with water to the level of the highest vent stack. For air testing, the

system shall be charged with air to a minimum pressure of 5 psig . Openings shall be plugged as necessary for either type of test. To be considered free of leaks, the system shall hold the water or air for 30 minutes without any drop in the water level or air pressure.

All necessary testing equipment and materials, including tools, appliances and devices, shall be furnished and all tests shall be made by and at the expense of Contractor. Contractor shall give Engineer 5 working days advanced notice of scheduled testing.

All joints in piping shall be tight and free of leaks. All joints which are found to leak, by observation or during any specified test, shall be repaired, and the tests repeated.

3-6.01. Air Pressure Tests. Not used.

3-7. CLEANING. The interior of all pipe, valves, and fittings shall be smooth, clean, and free of blisters, loose mill scale, sand, dirt, and other foreign matter when installed. Before being placed in service, the interior of all lines shall be thoroughly cleaned, to the satisfaction of Engineer.

Metal anhydrous ammonia, chlorine and sulfur dioxide piping shall be cleaned as recommended by the gas chemical feed system supplier. All surfaces which may come into contact with gas chemical shall be thoroughly dry and free of oil or grease before being placed in service. The recommended cleaning procedures shall be submitted for review in accordance with the Submittals section.

Tin-lined copper tubing for distribution of distilled water shall be flushed and cleaned with distilled water in accordance with the tubing manufacturer's recommendations.

3-8. ACCEPTANCE. Owner reserves the right to have any section of the piping system which he suspects may be faulty cut out of the system by Contractor for inspection and testing. Should the joint prove to be sound, Owner will reimburse Contractor on a time-and-material basis as specified in the Contract. Should the joint prove to be faulty, the destructive test will continue joint by joint in all directions until sound joints are found. Costs for replacement of faulty work and/or materials shall be the responsibility of Contractor.

End of Section

Section 15061

DUCTILE IRON PIPE

PART 1 - GENERAL

1-1. SCOPE. This section covers the furnishing and installation of ductile iron pipe. Ductile iron pipe shall be furnished complete with all fittings, specials, adapters, closure pieces, blowoffs, outlets, caps and plugs, temporary bulkheads, access manholes, jointing materials, pipe hangers and supports, anchors, blocking, encasement, appurtenances, and accessories specified and indicated on the Drawings, and as required for proper installation and functioning of the piping.

Piping furnished hereunder shall be complete with all joint gaskets, bolts, nuts and other jointing materials required for installation of any valves and equipment furnished by Owner or others for installation under this Contract).
Pipe hangers and supports, pressure and leakage testing, and cleaning and disinfection are covered in other sections. Pipe trenching, embedment, and backfill are covered in the Trenching and Backfilling section.

1-2. GOVERNING STANDARDS. Except as modified or supplemented herein, all ductile iron pipe, fittings, and specials shall conform to the applicable requirements of the following standards and other standards named in this section:

ANSI/AWWA Standards	Title
C151	Ductile-Iron Pipe, Centrifugally Cast, For Water
C600	Installation of Ductile Iron Water Mains and Their Appurtenances
M41	Ductile Iron Pipe and Fittings - Manual of Water Supply Practices
C104	Cement Mortar Lining for Ductile Iron Pipe and Fittings
C105	Polyethylene Encasement for Ductile Iron Pipe Systems
C110	Ductile-Iron and Gray-Iron Fittings
C111	Rubber-Gasket Joints for Ductile-Iron Pressure Pipe and Fittings
C115	Flanged Ductile-Iron Pipe With Ductile-Iron or Gray-Iron Threaded Flanges

C153 Ductile-Iron Compact Fittings

1-3. PIPE MANUFACTURER AND FIELD SERVICES. Not used.

1-4. SUBMITTALS. Drawings, details, specifications, and installation schedules covering all ductile iron pipe and accessories shall be submitted in accordance with the Submittals Procedures section. The drawings and data shall include, but shall not be limited to, the following:

Certification of pipe manufacturer's experience requirements.

Certification by manufacturer (affidavit of compliance) for each item furnished in accordance with the ANSI/AWWA Standards.

Restrained joints details.

Certification of gaskets by pipe manufacturer, certifying that gasket material is suitable for test pressures and services intended.

Certification of joint lubricant.

Certification of proof-of-design tests for joints, including restrained joints.

Two samples of the polyethylene encasement, each sample clearly identified as required by the Governing Standards and test results from an independent third party laboratory of the requirements specified in ANSI/AWWA C105/A21.5.

The method that the Contractor proposes to use for measuring deflection of pipe joints.

Submittal data shall clearly indicate the country of origin of pipe, fittings, flanges, restraining devices, and accessories. When requested by Engineer, certified copies of physical and chemical test results as outlined in ANSI/AWWA C151/A21.51 shall be submitted for the materials to be provided.

1-4.01. Emergency Repair Manual. Not used.

1-5. SPARE MATERIALS. Not used

1-6. SHIPPING, HANDLING, AND STORAGE. Shipping shall be in accordance with the Product Delivery Requirements section. Handling and storage shall be in accordance with the Product Storage and Handling Requirements section, and as specified herein.

Pipe, fittings, and accessories shall be handled in a manner that will ensure installation in sound, undamaged condition. Equipment, tools, and methods used

in handling and installing pipe and fittings shall not damage the pipe and fittings. Hooks inserted in ends of pipe shall have broad, well-padded contact surfaces. Unpadded hooks, wire brushes or other abrasive tools shall not be permitted to come into contact with polyethylene lining if such lining is specified.

Contractor-furnished pipe and fittings in which the lining has been damaged shall be replaced by and at the expense of Contractor. With the concurrence of Engineer, small and readily accessible damaged areas may be repaired.

Contractor shall repair any damage to pipe coatings and linings before the pipe is installed.

PART 2 - PRODUCTS

2-1. PIPE CLASS. The class of ductile iron pipe shall be as indicated in the following table. The specified class includes service allowance and casting allowance.

Pipe Size		ANSI/AWWA Pressure Class
inches	mm	
24	600	200
20 thru 14	500 thru 350	250
12 and smaller	300 and smaller	350

Pipe wall thickness for grooved and threaded end pipe shall be increased if necessary to comply with the following minimum thickness:

Pipe Size		Minimum Thickness Class	
inches	mm	Threaded Ends (1)	Grooved Ends (2)
4-16	100-400H	53	53
18	450	53	54
20	500	53	55
24	600	53	56
30-54	750-1400	53	--
60 & 64	1500-1600	350 (3)	--

(1) Complies with ANSI/AWWA C115/A21.15 for minimum pipe wall thickness for threaded flanges.

Pipe Size		Minimum Thickness Class	
inches	mm	Threaded Ends (1)	Grooved Ends (2)

(2) Complies with ANSI/AWWA C606 for grooved and shouldered joint ductile iron pipe.

(3) Minimum class for 60 and 64 inch pipe is pressure class 350.

2-2. MATERIALS.

Pipe	Ductile iron, ANSI/AWWA C151/A21.51
Gaskets – All Joint Types	Synthetic rubber unless otherwise specified; natural rubber will not be acceptable. All gaskets shall be furnished by the pipe manufacturer unless another manufacturer's product is indicated. Pipe manufacturer shall submit certificates of gasket suitability certifying that the gasket materials are compatible with the joints specified, are recommended for the specified field test pressure and service conditions. Gaskets for treated or potable water service shall be certified for chlorinated and chloraminated potable water. Gas and oil-resistant gaskets shall be made of Nitrile (NBR) rubber. The name of the material shall be permanently marked or molded on the gasket. Gaskets shall also be certified as suitable where soils may be contaminated with gas and oil products.
Joint Lubricant	Vegetable-based lubricant recommended by the pipe manufacturer. Petroleum or animal-based lubricants will not be acceptable. Lubricants that will be in contact with treated or potable water shall be certified as being in compliance with ANSI/NSF 61.
Fittings	ANSI/AWWA C110/A21.10 (except shorter laying lengths will be

acceptable for U.S. Pipe), or ANSI/AWWA C153/A21.53, minimum working pressure rating as follows, unless indicated otherwise on the Drawings.

Fitting Size in.	Material	Type	Min. Working Pressure Rating, psi
4 to 24	DI	Mechanical and Push-on joints	350
4 to 24	DI	Flanged joints	250
30 to 48	DI	All joints	250
54 to 64	DI	All joints	150

All fittings shall be ductile iron and suitable for the rated working pressure plus a surge or test pressure allowance of 100 psi or 1.5 times rated working pressure, whichever is less, without leakage or damage.

Push-on Joints	ANSI/AWWA C111/A21.11.
Restrained Push-on Joints, gaskets with stainless steel gripping segments, (4 inch through 12 inch) , working pressure rating 350 psi (2,400 kPa).	American “Fast Grip”. U.S. Pipe "Field Lok 350 Gasket", or McWane Sure Stop 350 Gasket.
Restrained Push-on Joints, locking wedge type, (4 inch through 24 inch) , working pressure rating 350 psi (2,400 kPa) for 4 through 16 inch and at least 250 psi (1,700 kPa) for 18 through 24 inch.	EBAA Iron "Megalug" Series 1700; U.S. Pipe “TR Flex Gripper Ring”; Star Pipe Products “StarGrip 3100P”; or American “Field Flex Ring”, without exception.
Restrained Push-on Joints, positive locking segments and/or rings, (4 inch through 24 inch) , working pressure rating 350 psi (2,400 kPa).	American "Flex-Ring,"; U.S. Pipe or McWane "TR Flex"
Restrained Push-on Joints, positive locking segments and/or rings, (30 inch through 48 inch) , working	American "Flex-Ring," or "Lok-Ring"; U.S. Pipe or McWane "TR Flex"; U.S. Pipe HP LOK..

	pressure rating at least 250 psi (1,700 kPa).	
	Restrained Push-on Joints, positive locking segments and/or rings, (54 inch thru 64 inch) , working pressure rating at least 250 psi (1,700 kPa).	American "Lok Ring"; or U.S,Pipe “H.P. LOK”.

Restrained push-on joints shall be suitable for a test or working pressure plus surge pressure of the rated working pressure plus 100 psi (680 kPa)

Flanged Joints			ANSI/AWWA C115/A21.15.
	Flanges		
		Class 250 (Where identified on the Drawings)	Ductile iron, flat faced, with ANSI/ASME B16.1, Class 250 diameter and drilling.
		All Others	Ductile iron, Class 125, ANSI/AWWA C115/A21.15.
	Flanges		All flanges shall be suitable for test pressure of 1.5 times rated pressure without leakage or damage.
	Bolts		ASTM A307, chamfered or rounded ends projecting 1/4 to 1/2 inch beyond outer face of nut.
	Nuts		ASTM A563, hexagonal, ANSI/ASME B18.2.2, heavy semifinished pattern.
	Gaskets		ASTM D1330, Grade I rubber, full face type, 1/8 inch thick unless otherwise required by pipe manufacturer and accepted by Engineer. Pipe manufacturer shall submit certification of gaskets furnished as indicated above under Gaskets - All Joint Types.
Mechanical Joints			ANSI/AWWA C111/A21.11., with ductile iron glands.
	Restrained Mechanical Joints (factory prepared spigot), (4 inch through 48 inch) , working pressure rating at least 250 psi (1,700 kPa).		American "MJ coupled Joints", or Griffin U.S. Pipe "Mech-Lok" (thru 36” size only).
	Restrained Mechanical Joints, (field cut spigot), (4 inch through 24 inch) , working pressure rating 350		EBAA Iron "Megalug" Series 1100, Sigma “One Lok” SLDE series, or Star Pipe Products “StarGrip 3000” without exception.

	psi (2,400 kPa) for 4 through 16 inch and at least 250 psi (1,700 kPa) for 18 through 24 inch.		
Restrained mechanical joints shall be suitable for a test or working pressure plus surge pressure of the rated working pressure plus 100 psi (680 kPa)			
	Wall Pipes or Castings		Mechanical joint with water stop and tapped holes; single casting or fabricated ductile iron pipe; holes sized in accordance with the details on the Drawings and provided with removable plugs.
	Mechanical Joints with Tie Rods		As indicated on the Drawings.
		Tie Rods	ASTM A307.
		Steel Pipe	ASTM A53, Schedule 40 or 80 as indicated on the Drawings.
		Washers	ANSI/ASME B18.22.1, plain steel.
Threaded Connections			ANSI/ASME B1.20.1, NPT; with boss or tapping saddle wherever wall thickness minus the foundry tolerance at the tapped connection is less than that required for 4-thread engagement as set forth in Table A.1, Appendix A, of ANSI/AWWA C151/A21.51.
Mechanical Couplings			
	Couplings		Dresser "Style 38"; Smith-Blair "411 Steel Coupling"; or Romac “Style 400” or "Style 501"; without pipe stop.
	Gaskets		Oil-resistant synthetic rubber gaskets shall be as recommended by the coupling manufacturer. Pipe manufacturer shall submit certification of gaskets furnished as indicated above under Gaskets - All Joint Types.
Restrained Mechanical Couplings			American Pipe “Restrained Coupling Gland Joint” coordinated with mechanical couplings furnished.
Flanged Coupling Adapters			
	Restrained (4 inch through 12 inch) . Unless otherwise		Smith-Blair "Type 912" or Romac "Style FCA501", with anchor studs of

	indicated on the Drawings, flanged coupling adapters shall be restrained.	sufficient size and number to withstand test pressures.
	Unrestrained (14 inch and larger)	Smith-Blair "Type 913" or Romac "Style FC400".
Dismantling Joints		
	Restrained (3 inch and larger) Unless otherwise indicated on the Drawings, dismantling joints shall be restrained.	Romac "DJ400"; Dresser "Style 131 Dismantling Joint" or Viking Johnson. For use in potable water systems, coating to be in accordance with NSF-61.
Tapping Saddles		Ductile iron, with stainless steel straps and synthetic rubber sealing gasket, 250 psi pressure rating.
Watertight/Dusttight Pipe Sleeves		GPT " Link-Seal", insulating type with modular rubber sealing elements, nonmetallic pressure plates, and stainless steel bolts and nuts.
Shop Coating and Lining		
	Cement Mortar Lining with Seal Coat	ANSI/AWWA C104/A21.4.
	Protective Fusion-Bonded	ANSI/AWWA C116/A21.16.
	Ceramic Epoxy Lining	Induron "Protecto 401 Ceramic Epoxy".
	Glass Lining	Two-coat system applied over blast-cleaned surface; ground and finish coats separately fired; finished lining thickness at least 10 mils , Mohs' Hardness 5 to 6 density as determined by ASTM D792; U.S. PipeFast Fabricators, Inc. "MEH 32" or "SG-14", or C&B Piping "CBGL911".
	Universal Primer	Manufacturer's standard. If in contact with treated or potable water, certify as being in compliance with ANSI/NSF 61.
	Asphaltic Coating	Manufacturer's standard.
	Zinc Coating	ISO 8179
	Coal Tar Epoxy	Manufacturer's standard.
	Liquid Epoxy	ANSI/AWWA C210, non-coal tar modified, or when in contact with treated or potable water, certify as being in compliance with ANSI/NSF 61.

Anti-Seize Thread Lubricant		Jet-Lube "Nikal", John Crane "Thred Gard Nickel", Bostik/Never-Seez "Pure Nickel Special" or Permatex "Nickel Anti-Seize".
Corrosion Protection		
	Polyethylene Encasement	Seamless, ANSI/AWWA C105/A21.5; LLDPE - 8 mil or HDCLPE - 4 mil .
	Heat-shrinkable Coating and Primer (Shrink Sleeve)	ANIS/AWWA C216, cross-linked polyethylene sheeting precoated with adhesive; minimum 80 mils; type and recovery as recommended by Shrink Sleeve manufacturer; Canusa-CPS or Berry Plastics Water Wrap.
	Wax Tape and Primer	ANSI/AWWA C217, cold-applied petroleum wax primer and cold-applied petroleum wax tape; Trenton Wax-Tape and Primer.
	Medium Consistency Coal Tar	Carboline "Bitumastic 50" or Tnemec "46-465 H.B. Tnemecol."

2-3. OUTLETS. Not used.

2-4. JOINTS. Joints in buried and tunnel locations shall be mechanical or push-on type unless otherwise indicated on the Drawings or where required to connect to existing piping or to valves. Bells on wall castings and wall sleeves shall be mechanical joint type, with tapped holes for tie rods or stud bolts. All other joints shall be flanged unless otherwise indicated on the Drawings.

Certification of joint design shall be provided in accordance with ANSI/AWWA C111/A21.11, Performance Requirements, as modified herein. The joint test pressure shall be not less than 2 times the working pressure rating of the joint. The same certification and testing shall also be provided for restrained joints. For restrained joints, the piping shall not be blocked to prevent separation and the joint shall not leak or show evidence of failure. It is not necessary that such tests be made on pipe manufactured specifically for this project. Certified reports covering tests made on other pipe of the same size and design as specified herein and manufactured from materials of equivalent type and quality may be accepted as adequate proof of design. Any new proof-of-design testing to meet the requirements for this project shall be independently verified and the Owner shall be given the opportunity to witness the testing.

Unless otherwise indicated on the drawings or acceptable to the Engineer, field closure pieces shall be located away from the bends or dead ends beyond the length over which joints are to be restrained.

The length of pipe having restrained joints shall be as indicated on the drawings or specified. All vertical bends and eccentric reducers shall have restrained joints.

2-4.01 Flanged Joints. Pipe shall extend completely through screwed-on flanges. The pipe end and flange face shall be finish machined in a single operation. Flange faces shall be flat and perpendicular to the pipe centerline.

2-4.02. Flanged Coupling Adaptors. Flanged coupling adapters shall be provided for restrained couplings 12 inch and smaller where indicated on the Drawings and as specified herein. Unless indicated otherwise on the Drawings, all flange coupling adapters 12 inch and smaller shall be restrained. Flange coupling adapters 14 inch and larger may only be used in unrestrained pipe applications.

The inner and outer surfaces of couplings, except flange mating surfaces, shall be prepared for coating in accordance with instructions of the coating manufacturer and shall then be shop coated with liquid epoxy in accordance with ANSI/AWWA C210. The flange mating surfaces shall be cleaned and shop primed with universal primer.

2-4.03. Dismantling Joints. Dismantling joints shall be provided for restrained couplings 6 inch and larger piping where indicated on the Drawings and as specified herein. Dismantling joints shall comply with AWWA C219 and shall be restrained flange by flange couplings manufactured as a single unit. Unless otherwise indicated on the Drawings, dismantling joints shall be restrained.

The inner and outer surfaces of dismantling joints, except flange mating surfaces, shall be prepared for coating in accordance with instructions of the coating manufacturer and shall then be shop coated with liquid epoxy in accordance with ANSI/AWWA C210. The flange mating surfaces shall be cleaned and shop primed with universal primer.

2-4.04. Mechanical Couplings. The piping layout for mechanical couplings shall provide a space of at least 1/4 inch , but not more than 1 inch , between the pipe ends.

All surfaces, including the interior surfaces of the middle rings, shall be prepared for coating in accordance with instructions of the coating manufacturer and shall be shop coated with 16 mils liquid epoxy in accordance with ANSI/AWWA C210. A ductile iron pipe factory spacer shall be provided for the piping where indicated on the drawings. The spacer shall be shop lined and coated with 16 mils of liquid epoxy. Piping surfaces within the coupling shall be shop coated with 16 mils of liquid epoxy.

Tie bolts shall be provided to restrain mechanical coupling connections where indicated on the Drawings. The connecting pipe shall be furnished with welded retainer rings as recommended by pipe manufacturer. The pipe manufacturer shall also coordinate the restrained connection with the pressure rating, length, and diameter dimensions of the mechanical coupling being furnished to assure proper clearance is provided for completing the restrained coupling installation.

2-4.05. Grooved-End Couplings. Grooved-end couplings shall not be used in the following applications: chemical service, except lime slurry piping, flammable liquid or flammable gas piping, compressed air or compressed gas piping operating at pressures above 25 psig , toxic gas piping, hot liquid with operating temperatures above 120°F , or steam piping.

2-5. REDUCERS. Reducers shall be eccentric or concentric as indicated on the Drawings. Reducers of eccentric pattern shall be installed with the straight side on top, so that no air traps are formed.

2-6. BLOWOFFS. Not used.

2-7. ACCESS OPENINGS. Not used.

2-8. WALL AND FLOOR PIPES. Wall and floor pipes shall be installed where ductile iron pipes pass through concrete walls or floors, unless otherwise indicated on the Drawings.

Where a flange and mechanical joint pipe piece is to connect to a mechanical joint wall pipe or casting, the bolt holes in the bell of the wall pipe or casting shall straddle the top centerline of the horizontal pipe or casting and shall align with the bolt holes in the flange and mechanical joint piece. The top centerline shall be marked on the wall pipe or casting at the foundry or fabrication shop.

In vertical piping, the bolt holes of flanged and mechanical joint floor pipes or castings shall be aligned with the bolt holes of the flange or mechanical joint connecting piece. The required centerline alignment and orientation of the floor pipe or casting shall be marked on the floor pipe or casting at the foundry or fabrication shop.

2-9. WALL AND FLOOR SLEEVES. Wall and floor sleeves shall be installed where indicated on the Drawings and shall be installed where ductile iron pipe passes through concrete walls and floors or masonry walls, unless otherwise noted. To minimize sleeve size, piping on either side of the sleeve shall be provided with a screw-on flange, grooved coupling, or mechanical coupling with anchor studs to allow the pipe to pass through the sleeve. Where required, sleeves in masonry walls may be enlarged enough for flange or other joint restraint to pass through the sleeve.

Where specified or indicated on the Drawings, one or two sets of modular casing seals shall be installed at the face of walls to seal against soil or provide a dust or water tight seal. Contractor shall coordinate the diameter of wall or floor sleeves with the modular casing seal manufacturer. When soil may be present at wall sleeves, two sets of modular casing seals shall be installed, one at each face of the wall. Unless otherwise indicated on the Drawings, modular casing seals shall not be used in submerged conditions unless the hydrostatic pressure is less than 20 feet and piping is less than 24 inch size.

2-10. SHOP COATING AND LINING. The interior of all pipe and fittings, unless noted otherwise, shall be cement mortar lined.

The exterior surfaces of all pipe and fittings which will be exposed in both interior and exterior locations shall be shop primed. Flange faces shall be coated with a suitable rust-preventive compound. Exterior surfaces of all other pipe and fittings shall be coated with asphaltic coating.

2-11. OWNER'S SHOP INSPECTION AND TESTING. Not used.

PART 3 – EXECUTION

3-1. INSPECTION. Pipe and fittings shall be carefully examined for cracks and other defects immediately before installation; pipe ends shall be examined with particular care. All defective pipe and fittings shall be removed from the site.

3-2. PROTECTION AND CLEANING. The interior of all pipe and fittings shall be thoroughly cleaned of all foreign material prior to installation and shall be kept clean until the work is completed. Before jointing, all joint contact surfaces shall be wire brushed if necessary and wiped clean.

Precautions shall be taken to prevent foreign material from entering the pipe during installation. Debris, tools, clothing, or other objects shall not be placed in or allowed to enter the pipe.

Whenever pipe laying is stopped, the open end of the pipe shall be closed to prevent entry of dirt, mud, rodents, and other material. All water in the trench shall be removed prior to removing the closure.

3-3. CUTTING PIPE. Cutting shall be done in a neat manner, without damage to the pipe or the lining. Cuts shall be smooth, straight, and at right angles to the pipe axis. After cutting, the ends of the pipe shall be dressed with a file or a power grinder to remove all roughness and sharp edges. The cut ends of push-on joint pipe shall be suitably beveled.

All field cutting of existing gray cast iron pipe shall be done with mechanical pipe cutters, except where the use of mechanical cutters would be difficult or impracticable.

Ends of ductile iron pipe shall be cut with a portable guillotine saw, abrasive wheel, saw, milling cutter, or oxyacetylene torch. The use of hydraulic squeeze type cutters will not be acceptable. Field-cut holes for saddles shall be cut with mechanical cutters; oxyacetylene cutting will not be acceptable.

Contractor shall use factory prepared pipe ends unless a field cut is required for connections.

3-4. ALIGNMENT AND GRADE. Not used.

3-5. LAYING PIPE. Not used.

3-6. JOINTS. Each joint, including restrained joints, shall be checked by Contractor as recommended by the pipe manufacturer to verify that the joint and the restraints are installed properly. Restrained joints shall be extended after they are assembled to minimize further take-up.

3-7. MECHANICAL JOINTS. Mechanical joints shall be carefully assembled in accordance with the pipe manufacturer's recommendations. If effective sealing is not obtained, the joint shall be disassembled, thoroughly cleaned, and reassembled. Bolts shall be uniformly tightened to the torque values listed in Appendix A of ANSI/AWWA C111/A21.11. Over tightening of bolts to compensate for poor installation practice will not be acceptable.
The holes in mechanical joints with tie rods shall be carefully aligned to permit installation of the tie rods. In flange and mechanical joint pieces, holes in the mechanical joint bells and the flanges shall straddle the top centerline for horizontal piping.

3-8. PUSH-ON JOINTS. pipe manufacturer's instructions and recommendations for proper jointing procedures shall be followed. All joint surfaces shall be lubricated with a soap solution provided by the pipe manufacturer immediately before the joint is completed. Lubricant shall be suitable for use in potable water, shall be stored in closed containers, and shall be kept clean. Each spigot end shall be suitably beveled to facilitate assembly.

Pipe ends for restrained joint pipe shall be prepared in accordance with the pipe manufacturer's recommendations.

3-9. FLANGED JOINTS. When bolting flanged joints, care shall be taken to avoid restraint on the opposite end of the pipe or fitting which would prevent uniform gasket compression or would cause unnecessary stress in the flanges. One flange shall be free to move in any direction while the flange bolts are being

tightened. Bolts shall be tightened gradually in a crisscross pattern and at a uniform rate, to ensure uniform compression of the gasket around the entire flange. All flange joint bolting procedures shall be in accordance with the pipe manufacturer's recommendations.

Special care shall be taken when connecting piping to any pumping equipment to ensure that piping stresses are not transmitted to the pump flanges. All connecting piping shall be permanently supported to obtain accurate matching of bolt holes and uniform contact over the entire surface of flanges before any bolts are installed in the flanges.

Pump connection piping shall be free to move parallel to its longitudinal centerline while the bolts are being tightened. Each pump shall be leveled, aligned, and wedged into position which will fit the connecting piping, but shall not be grouted until the initial fitting and alignment of the pipe, so that the pump may be shifted on its foundation if necessary to properly install the connecting piping. Each pump shall, however, be grouted before final bolting of the connecting piping.

After final alignment and bolting, the pump connections shall be tested for applied piping stresses by loosening the flange bolts which, if the piping is properly installed, should result in no movement of the piping relative to the pump or opening of the pump connection joints. If any movement is observed, the piping shall be loosened and re-aligned as needed and then the flanges bolted back together. The flange bolts shall then be loosened and the process repeated until no movement is observed.

3-9.01. Insulated Flanged Joints. Not used.

3-10. FLANGED COUPLING ADAPTERS. Flange coupling adapters shall be installed in accordance with the coupling manufacturer's recommendations. After the pipe is in place and bolted tight, the locations of holes for the anchor studs shall be determined and the pipe shall be field-drilled. Holes for anchor studs shall be drilled completely through the pipe wall. Hole diameter shall be not more than 1/8 inch larger than the diameter of the stud projection. Unless indicated on the Drawings, all flange coupling adapters shall be restrained.

3-11. DISMANTLING JOINTS. Dismantling joints shall be installed in accordance with the coupling manufacturer's recommendations.

3-12. MECHANICAL COUPLINGS. Mechanical couplings shall be installed in accordance with the coupling manufacturer's recommendations. A space of at least 1/4 inch , but not more than 1 inch , shall be left between the pipe ends. Pipe and coupling surfaces in contact with gaskets shall be clean and free from dirt and other foreign matter during assembly. All assembly bolts shall be

uniformly tightened so that the coupling is free from leaks, and all parts of the coupling are square and symmetrical with the pipe. Following installation of the coupling, damaged areas of shop coatings on the pipe and coupling shall be repaired to the satisfaction of Engineer.

3-13. GROOVED-END JOINTS. Grooved-end joints with rigid type grooving shall be installed in accordance with the coupling manufacturer's recommendations. Completed joints shall be rigid and shall allow no angular deflection or longitudinal movement. Except for closure pieces, field grooving of pipe will not be acceptable.

3-14. GAS AND OIL-RESISTANT GASKETS. Gas and oil-resistant gaskets shall be installed where specified, indicated on the Drawings, or directed by Engineer where jointing gaskets may be subject to permeation when piping passes through areas where soil may be contaminated with gas or petroleum (oil) products or organic solvents or their vapors.

3-15. CORROSION PROTECTION.

3-15.01. Polyethylene Encasement. All buried pipe including all straight pipe, bends, tees, adapters, closure pieces, and other fittings or specials, shall be provided with at least one wrap of polyethylene encasement. Other locations where ductile iron pipe and accessories shall be double wrapped with polyethylene encasement shall be as specified herein. Where ductile iron pipe is also encased in concrete, including in locations beneath structures, the polyethylene encasement shall be installed around the pipe for 5 feet extending into each end of the concrete encasement. Where the ductile iron pipe is embedded within a concrete structure wall, floor or footing, the polyethylene encasement for the pipe shall end at the outside faces of the structure. Ductile iron pipe embedded within concrete structures shall not be wrapped with polyethylene encasement.

All buried flanged valves, mechanical joint couplings with tie rods, mechanical couplings, restrained mechanical couplings and other pipe harness assemblies at valves or structure walls shall be provided with two wraps of polyethylene encasement in addition to other corrosion protection coatings as specified herein.

Polyethylene tube protection shall be installed in accordance with ANSI/AWWA C105/A21.5, Method A. Preparation of the pipe shall include, but shall not be limited to, removal of lumps of clay, mud, cinders, etc., prior to installation.

The terms "polyethylene tube protection" and "polyethylene encasement" are interchangeable and shall have the same meaning in these Contract Documents.

3-15.01.01. Inspection and Testing. Not used.

3-15.02. Mechanical Joint Couplings with Tie Rods. The mechanical joint tie rods, bolt studs, pipe spacers and washers of buried mechanical joint couplings shall be protected by wrapping them with wax tape in accordance with ANSI/AWWA C217. A primer shall be applied prior to applying the wax tape. The application of the wax tape shall be as recommended by the wax tape manufacturer. There shall be no bare or unprotected ferrous metal surfaces.

Following application of the wax tape protection, the entire mechanical joint coupling assembly shall be wrapped with two layers of polyethylene encasement as specified herein. The two wraps of polyethylene encasement shall be lapped a minimum of 12 inches with the polyethylene encasement of the piping on each side of the coupling assembly.

3-15.03. Flanged Joints. The flange bolts and nuts on buried flanges, including valve flanges, shall be protected by wrapping them with wax tape in accordance with ANSI/AWWA C217. A primer shall be applied prior to applying the wax tape. The application of the wax tape shall be as recommended by the wax tape manufacturer. There shall be no bare or unprotected ferrous metal surfaces.

Following application of the wax tape protection, the entire flanged joint shall be wrapped with two layers of polyethylene encasement as specified herein. The two wraps of polyethylene encasement shall be lapped a minimum of 12 inches with the polyethylene encasement on each side of the joint.

3-15.04. Valves. Buried portions of the valve and the actuator to the wrench nut shall be wrapped with two layers of polyethylene encasement as specified herein. The two wraps of polyethylene encasement shall be lapped a minimum of 12 inches with the polyethylene encasement of the piping on each side of the valve.

3-15.05. Mechanical Couplings. The tie bolts and nuts on all buried mechanical couplings shall be coated with two coats of medium consistency coal tar.

After the protective coating has been applied to the tie bolts, the entire mechanical coupling shall be encapsulated with a shrink sleeve. The shrink sleeve shall extend a minimum of 6 inches on to the pipe on each side of the coupling. A primer shall be applied to the piping on each side of the coupling prior to installing the shrink sleeve. The application of the shrink sleeve shall be in accordance with ANSI/AWWA C216 and as recommended by the shrink sleeve manufacturer. There shall be no bare or unprotected ferrous metal surfaces. Following installation of the shrink sleeve, the entire assembly shall be encapsulated with two wraps of polyethylene encasement lapped a minimum of 12 inches with the polyethylene encasement of the piping on each side of the assembly as specified herein.

3-15.06. Restrained Mechanical Couplings. The corrosion protection for the mechanical coupling and its tie bolts and nuts of all buried restrained mechanical coupling assemblies shall be protected with two coats of medium consistency coal tar and shrink sleeve as specified herein for buried mechanical couplings.

The tie rods and bolts of the coupling assembly shall be protected by wrapping them with wax tap in accordance with ANSI/AWWA C217. A primer shall be applied prior to applying the wax tape. The application of the wax tape shall be as recommended by the wax tape manufacturer. There shall be no bare or unprotected ferrous metal surfaces.

Following the application of the wax tape, the entire restrained mechanical coupling assembly shall be encapsulated with two wraps of polyethylene encasement lapped a minimum of 12 inches with the polyethylene encasement of the piping on each side of the assembly as specified herein.

3-15.07. Other Assemblies. All ferrous metal clamps, tie rods, bolts, and other components of buried joint harnesses, tapping saddles, or pipe reaction anchorages in contact with earth or other fill material and not encased in concrete, shall be protected by wrapping them with wax tape in accordance with ANSI/AWWA C217. A primer shall be applied prior to applying the wax tape. The application of the wax tape shall be as recommended by the wax tape manufacturer. There shall be no bare or unprotected ferrous metal surfaces.

Following the application of the wax tape, the entire assembly shall be encapsulated with two wraps of polyethylene encasement lapped a minimum of 12 inches with the polyethylene encasement of the piping on each side of the assembly as specified herein.

3-15.08. Surfaces Exposed in Manholes and Vaults. Unless otherwise specified, all uncoated surfaces exposed in manholes and vaults shall be cleaned and coated with two coats of medium consistency coal tar. The first coat shall be dry and hard before the second coat is applied. There shall be no unprotected, bare, or uncoated ferrous metal surfaces.

3-16. PROVISIONS FOR CATHODIC PROTECTION SYSTEMS. Not used

3-17. CONNECTIONS WITH EXISTING PIPING. Connections between new work and existing piping shall be made using fittings suitable for the conditions encountered. Each connection with an existing pipe shall be made at a time and under conditions which will least interfere with service to customers, and as authorized by Owner. Facilities shall be provided for proper dewatering and for disposal of all water removed from dewatered lines and excavations without damage to adjacent property.

Special care shall be taken to prevent contamination when dewatering, cutting into, and making connections with existing potable water piping. Trench water, mud, or other contaminating substances shall not be permitted to enter the lines. The interior of all pipe, fittings, and valves installed in such connections shall be thoroughly cleaned and then swabbed with, or dipped in, a 500 mg/L chlorine solution.

3-18. CONCRETE ENCASEMENT. Concrete encasement shall be installed where indicated on the Drawings. A pipe joint shall be provided within 12 inches of each end of the concrete encasement. Concrete and reinforcing steel shall be as specified in the Cast-in-Place Concrete section. All pipe to be encased shall be suitably supported and blocked in proper position, and shall be anchored to prevent flotation.

3-19. REACTION ANCHORAGE AND BLOCKING. Not used.

3-20. PRESSURE AND LEAKAGE TESTS.
After installation, pipe and fittings shall be subjected to a pressure test and a leakage test. The Contractor shall provide all necessary pumping equipment; piping connections between the piping and the nearest available source of test water; pressure gauges; and other equipment, materials, and facilities necessary for the tests. The minimum test pressure shall be 200 psi

All pipe, fittings, valves, pipe joints, and other materials which are found to be defective shall be removed and replaced with new and acceptable materials, and the affected portion of the piping shall be retested by and at the expense of Contractor.

All joints shall be watertight and free from visible leaks. Any visible leak which is discovered within the correction period stipulated in the General Conditions shall be repaired by and at the expense of Contractor.

3-21. CLEANING AND DISINFECTION. The interior of all pipe and fittings shall be thoroughly cleaned before installation and shall be kept clean of any foreign matter until the work has been accepted. All joint contact surfaces shall be kept clean until the joint is completed.

End of Section

Section 15093

CHECK VALVES

PART 1 - GENERAL

1-1. SCOPE. This section covers the furnishing of check valves as specified herein.

Piping, pipe supports, insulation, and accessories that are not an integral part of the valves or are not specified herein are covered in other sections.

1-2. GENERAL. Equipment furnished under this section shall be fabricated and assembled in full conformity with Drawings, Specifications, engineering data, instructions, and recommendations of the equipment manufacturer unless exceptions are noted by Engineer.

Valves shall be furnished with all necessary parts and accessories indicated on the Drawings, specified, otherwise required for a complete, properly operating installation and shall be the latest standard products of a manufacturer regularly engaged in the production of valves.

1-2.01. General Equipment Stipulations. The General Equipment Stipulations shall apply to all equipment furnished under this section. If requirements in this specification differ from those in the General Equipment Stipulations, the requirements specified herein shall take precedence.

1-2.02. Temporary Number Plates. Not used.

1-2.03. Identification. Valves specified herein shall be tagged in accordance with the Equipment and Valve Identification section.

1-3. SUBMITTALS. Complete drawings, details, and specifications covering the valves and their appurtenances shall be submitted in accordance with the Submittals Procedures section. Included in the submittal shall be drawings by the valve manufacturer to indicate the position of the valve actuator and valve shaft.

PART 2 – PRODUCTS

2-1. CONSTRUCTION.

2-1.01. Valves VC-1. Not used.

2-1.02. Valves VC-2. Not used.

2-1.03. Valves VC-3. Not used.

2-1.04. Valves VC-4. Not used.

2-1.05. Valves VC-5. Not used.

2-1.06. Valves VC-6. Not used.

VC-6 Water, service, actuated check-control valves 2-1/2 inch [68 mm] and larger pipe	Rating Code Type Body/Bonnet Trim Seat Ring Disc Hinge Pins Bushings Cover Gasket End Connection Temp. Limitations Manufacturers	Class 125 AWWA C508 Horizontal swing, bolted bonnet ASTM A126 Class B cast iron Bronze Bronze Bronze or brass Bronze Manufacturer's standard Flanged, ASME B16.1 Class 125, flat faced -20 to 212°F [-29 to 100°C] APCO "smartCheck" or equal

2-1.07. Valves VC-7. Not used.

2-1.08. Valves VC-8. Not used.

2-1.09. Valves VC-9. Not used.

2-1.10. Valves VC-10. Not used.

2-1.11. Valves VC-11. Not used.

2-1.12. Valves VC-12. Not used.

2-1.13. Valves VC-13. Not used.

2-1.14. Valves VC-14. Not used.

2-1.15. Valves VC-15. Not used.

2-1.16. Valves VC-16. Not used.

2-1.17. Valves VC-17. Not used.

2-1.18. Valves VC-18. Not used.

2-1.19. Valves VC-19. Not used.

2-1.20. Shop Coatings. All ferrous metal surfaces of valves and accessories, both interior and exterior, shall be shop coated for corrosion protection. The valve manufacturer's standard coating will be acceptable, provided it is functionally equivalent to the specified coating.

Coating Materials

Coal Tar Epoxy	High-build coal tar epoxy; Ameron "Amercoat 78HB Coal Tar Epoxy", Carboline "Bitumastic 300 M", Tnemec "46H-413 Hi-Build Tneme-Tar", or Sherwin-Williams "Hi-Mil Sher-Tar Epoxy".
Epoxy Enamel (for liquid service)	Ameron "Amerlock 400 High-Solids Epoxy Coating", Carboline "Carboguard°891", or Tnemec "Series N140 Pota-Pox Plus".
Rust-Preventive Compound	As recommended by the manufacturer.

Surfaces To Be Coated

Unfinished Surfaces

Interior Surfaces	
Liquid Service	Epoxy enamel.
Exterior Surfaces of Valves To Be Buried, Submerged, or Installed in Manholes or Valve Vaults	Asphalt varnish or coal tar epoxy.
Exterior Surfaces of All Other Valves	Universal primer.
Polished or Machined Surfaces	Rust-preventive compound.
Actuators and Accessories	Universal primer.

PART 3 - EXECUTION

3-1. INSTALLATION. Materials furnished under this section shall be installed in accordance with Valve Installation section.

End of Section

Section 15101

AWWA BUTTERFLY VALVES

PART 1 – GENERAL

1-1. SCOPE. This section covers furnishing of AWWA butterfly valves for cold water service as indicated in the AWWA Butterfly Valve Schedule.

AWWA butterfly valves shall be furnished complete with actuators and accessories as specified herein, as indicated in the schedule, and as specified in the Valve and Gate Actuators section.

1-2. GENERAL. Equipment provided under this section shall be fabricated and assembled in full conformity with Drawings, Specifications, engineering data, instructions, and recommendations of the equipment manufacturer, unless exceptions are noted by Engineer.

Valves shall be furnished with all necessary parts and accessories indicated on the Drawings, specified, or otherwise required for a complete, properly operating installation and shall be the latest standard products of a manufacturer regularly engaged in the production of valves.

1-2.01. General Equipment Stipulations. The General Equipment Stipulations shall apply to all equipment furnished under this section. If requirements in this specification differ from those in the General Equipment Stipulations, the requirements specified herein shall take precedence.

1-2.02. Governing Standard. Except as modified or supplemented herein, all butterfly valves and manual actuators shall conform to the applicable requirements of ANSI/AWWA C504**.**

1-2.03. Marking. The country of origin of all castings and an identifying serial number shall be stamped on a corrosion-resistant plate attached to the valve body.

1-2.04. Temporary Number Plates. Not used.

1-2.05. Identification. AWWA butterfly valves shall be tagged in accordance with the Equipment and Valve Identification section.

1-3. SUBMITTALS. Complete drawings, details, and specifications covering the valves and their appurtenances shall be submitted in accordance with the Submittals Procedures section. Included in the submittal shall be drawings by the valve manufacturer to indicate the position of the valve actuator and valve shaft.

PART 2 - PRODUCTS

2-1. ACCEPTABLE PRODUCTS. Butterfly valves shall be by the manufacturers listed below.

DeZurik

Pratt (Mueller)

M&H

Val-Matic

Rodney Hunt

2-2. MATERIALS. Except as modified or supplemented herein, materials used in the manufacture of butterfly valves shall conform to the requirements of the governing standard.

Acceptable shop coatings are listed in the following table.

Epoxy	
For Liquid Service other than in potable water facilities	PPG Amercoat “Amercoat 385 Epoxy”, Carboline “Carboguard 890”, Sherwin-Williams "Macropoxy 646" or Tnemec “Series N69 Hi-Build Epoxoline II”.
Rust-Preventive Compound	As recommended by manufacturer.

2-3. VALVE CONSTRUCTION.

2-3.01. Valve Bodies. Valves shall be short-body type unless otherwise specified. The use of a stop or lug cast integrally with or mechanically secured to the body for the purpose of limiting disc travel by means of direct contact or interference with the valve disc (in either the open or closed position) will not be acceptable.

2-3.02. Flanges. Flanges shall be finished to true plane surfaces within a tolerance limit of 0.005 inch. The finished face shall be normal to the longitudinal valve axis within a maximum angular variation tolerance of 0.002 inch per foot (0.017 percent) of flange diameter.

2-3.03. Mechanical Joint Ends. Mechanical joint ends shall be either mechanical

joint or push-on ends conforming to ANSI/AWWA C111/A21.11.

2-3.04. Valve Shafts. Valve shafts shall be fabricated of AISI Type 304 or 316 stainless steel. The use of shafts having a hexagonal cross section will not be acceptable. The connection between shaft and disc shall be in accordance with the governing standard.

The connection between the shaft and the disc shall be mechanically secured by means of solid, smooth sided, stainless steel or monel taper pins or dowel pins. Each taper pin or dowel pin shall extend through or shall wedge against the side of the shaft and shall be mechanically secured in place. The use of set screws, knurled or fluted dowel pins, expansion pins, roll pins, tension pins, spring pins, or other devices instead of the pins specified herein will not be acceptable.

2-3.05. Valve Seats. Acceptable seating surfaces mating with rubber are AISI Type 304 or 316 stainless steel, monel, or plasma-applied nickel-chrome overlay for all valves; bronze for 20 inch and smaller valves; and alloy cast iron for 20 inch and smaller manually operated valves.

Valve seat configurations which rely on the mating pipe flange to hold the seat in position in the valve body will not be acceptable.

2-3.06. Shaft Seals. Shaft seals shall be of the chevron type.

2-3.07. Thrust Bearings. Each valve shall be provided with one or more thrust bearings in accordance with the governing standard. Thrust bearings which are directly exposed to line liquid and which consist of a metal bearing surface in rubbing contact with an opposing metal bearing surface will not be acceptable.

2-4. VALVE ACTUATORS. Requirements for valve actuators shall be as specified herein. Valve actuator types shall bemanual type.

All 8 inch and larger valves shall have geared actuators.

If valves with an AWWA class designation higher than specified are furnished, actuator torque capabilities shall be increased accordingly and shall be acceptable to Engineer.

2-4.01. Actuator Sizing. The valve manufacturer shall size the actuator in accordance with the governing standard, the operating conditions and requirements indicated in the AWWA Butterfly Valve Schedule, and the valve manufacturer's requirements.

Unless otherwise indicated or specified, actuator torque requirements shall be based on a maximum differential pressure across the valve equal to the

maximum pressure associated with the valve class and a maximum velocity through the valve of 16 feet per second.

Valves with operating stands shall have actuator torques increased by 25 percent. Actuator torques determined by the above requirements shall be increased by any design factors required by paragraph 4.2.8 of ANSI/AWWA C504 or as specified herein.

2-5. SHOP PAINTING. All interior and exterior ferrous metal surfaces, except finished surfaces, bearing surfaces, and stainless steel components, of valves and accessories shall be shop painted for corrosion protection. The valve manufacturer's standard coating will be acceptable, provided it is functionally equivalent to the specified coating and is compatible with the specified field painting.

Surfaces shall be painted as follows:

Unfinished Surfaces	
Interior Surfaces	Epoxy.
Exterior Surfaces of Valves to be Submerged	Epoxy.
Exterior Surfaces of All Other Valves	Universal primer.
Polished or Machined Surfaces	
Flange Faces	Rust-preventive compound.
Other Surfaces	Epoxy.

Interior coatings shall comply with ANSI/AWWA C550 and shall be free of holidays. The total dry film thickness of shop-applied coatings shall be not less than:

Type of Coating	Minimum Dry Film Thickness
Epoxy	10 mils
Universal Primer	3 mils

2-6. ACCESSORIES. Requirements for extension stems and stem guides, position indicators, floor boxes, operating stands, torque tubes, valve boxes, and extension bonnets shall be as indicated on the Drawings and the AWWA Butterfly Valve Schedule and as specified in the Valve and Gate Actuators section.

PART 3 - EXECUTION

3-1. INSTALLATION. Valves shall be installed in accordance with the Valve Installation section.

3-1.01. Installation Check. Not used.

End of Section

Schedule 15101
AWWA Butterfly Valves Schedule

1.010	1.020	1.031	1.040	1.060	1.070	1.080	1.090	2.010	2.020	8.010	8.020	8.040	8.041	8.050	8.060
Tag Number	**Size**	**Application**	**Type of Installation(2)**	**AWWA Class(3)**	**Maximum Non-Shock Shutoff Pressure**	**Maximum Differential Pressure**	**Maximum Velocity**	**Type of Manual Actuator(4)**	**Limit Switches(6)**	**Extensions Stems**	**Position Indicator for Buried Valve Actuators**	**Cast Iron Operating Stands**	**Fabricated Steel Operating Stands**	**Torque Tubes**	**Extension bonnet**
	(in)				(psi)	(psi)	(ft/s)								
V-6-2-5	24	DIW pump suction	IP	150A-F			8	HW		No	No	No	No	No	No
V-6-2-6	24	DIW pump discharge	IP	150A-F			8	HW		No	No	No	No	No	No

Notes:

(1) Actuators designated "O-C" are for "Open-Close" service. Actuators designated "M" are for "Modulating" service.

(2) Abbreviations for installation types are as follows:

B4	Buried, depth of 4 feet [1.2 m] or less
B20	Buried, depth greater than 4 feet [1.2 m] but 20 feet [6.1 m] or less
Bxx	Buried, depth greater than 20 feet [6.1 m], actual depth of xx feet
SV20	Submerged or vaulted, depth 20 feet [6.1 m] or less
SVxx	Submerged or vaulted, depth greater than 20 feet [6.1 m], actual depth of xx feet
IP	In plant

(3) Suffix letters define valve ends as follows:

F	Flanged
W	Wafer
MJ	Mechanical joint
S	Single Flange

(4) Abbreviations for actuator types are as follows:

WN	Wrench Nut
LVR	Lever
CW	ChainWheel
HW	HandWheel

(5) If a value is indicated, the leakage test shall be performed using this pressure value rather than the pressure indicated by the AWWA class.

(6) Abbreviations for limit switches on manual and cylinder operated valves.

EOT	End of travel (open - close)
PSS	Pump start - stop (two intermediate positions)
ELSCH	See electrical schematics

(7) Abbreviations for electronic or electric actuator housing.

WP	Weatherproof
SUB	Submersible [xx = depth of submergence] (SUBxx)
EXP	Explosion proof

(8) Cylinder actuators shall have torque safety factors applied in accordance with AWWA C504.

(9) Abbreviations for control devices are as indicated.

Table 1: Control Devices

Abbreviations	Open-Close Push Button	Open-Stop- Close Push Button	Local-Off-Remote	Red and Green Indicator Lights
A	Required		Required	Required
B	Required		Required	
C		Required	Required	Required
D		Required	Required	
E		Required		
F	Required			
G	Required			Required
H		Required		Required

(10) Abbreviations for electric actuator types are as follows:

SE	Standard Electric
IE	Intelligent Electric
NE	Networked Electric

END OF SCHEDULE

(11) Abbreviation for remote control station types:
CS Control Station without Indicating Lights
CIS Control Station with Indicating Lights

Section 15130

PRESSURE GAUGES

PART 1 - GENERAL

1-1. SCOPE. This section covers analog dial-type gauges and accessories to be furnished and installed at the locations indicated on the Drawings.

Gauges to be furnished by an equipment supplier, either with an item of equipment or as a component of an equipment package, are covered in the applicable equipment section.

Gauge piping and fittings are covered in other sections.

1-2. GENERAL.

1-2.01. General Equipment Stipulations. The General Equipment Stipulations shall apply to all equipment furnished under this section. If requirements in this specification differ from those in the General Equipment Stipulations, the requirements specified herein shall take precedence.

1-2.02. Governing Standard. Except as modified or supplemented herein, all gauges shall conform to the requirements of ANSI/ASME B40.1.

1-2.03. Accuracy Grade. Unless otherwise specified, gauge accuracy shall be ANSI Grade 2A or better. Overall accuracy for diaphragm seal protected and liquid-filled gauges shall be ANSI Grade A or better.

1-3. SUBMITTALS. Complete drawings or catalog cuts, together with detailed specifications and data covering materials used, shall be submitted in accordance with the Submittals Procedures section.

PART 2 - PRODUCTS

2-1. GAUGE CONSTRUCTION. Unless otherwise specified, gauges shall be indicating dial type, with C-type phosphor bronze Bourdon tube; stainless steel rotary geared movement; phenolic or polypropylene solid front turret case; adjustable pointer; stainless steel, phenolic, or polypropylene ring; and acrylic plastic or shatterproof glass window.

The dial shall be 4-1/2 inches in diameter, with white background and black markings. The units of measurement shall be indicated on the dial face. Subdivisions of the scale shall conform to the requirements of the governing

standard. Pointer travel shall be not less than 200 degrees nor more than 270 degrees of arc.

Unless otherwise indicated, pressure gauges shall measure in psig and vacuum gauges shall measure in inches Hg vacuum. All gauges shall have a suitable range to give mid-scale readings under normal conditions

Flush-mounted and surface-mounted gauges shall be provided with 1/4 inch NPT connections. All stem-mounted gauges shall be provided with 1/2 inch NPT connections.

The units of measurement, range, and mounting configuration of each gauge shall be as indicated in the Gauge Schedule.

2-2. GAUGE ACCESSORIES. Not used.

PART 3 - EXECUTION

3-1. INSTALLATION. Gauges shall be installed at the locations indicated on the Drawings. Installation configurations shall conform to the requirements of the Gauge Installation Details.

All gauges, snubbers and diaphragm seals shall be installed in the vertical upright position. Threaded connections shall be assembled using teflon thread tape or teflon thread sealer, as specified in the Miscellaneous Piping and Accessories Installation section. Teflon thread sealer shall not be used for liquid oxygen or oxygen gas piping. All connections shall be free from leaks.

Lines shall be purged of trapped air at gauge locations prior to installation of the gauge or diaphragm seal.

End of Section

Section 15140

PIPE SUPPORTS

PART 1 - GENERAL

1-1. SCOPE. This section covers the furnishing and installation of pipe hangers, brackets, supports, bracing, anchorage, and the design for the pipe support system for pipes 12 inches and smaller. Pipe supports shall be furnished complete with all necessary inserts, bolts, nuts, rods, washers, and other accessories. This section also covers the spacing of expansion joints in pipes 12 inches in diameter and smaller. Expansion joint products and materials are covered in the respective piping sections.
This section covers pipe supports for the following pipe materials:

Copper (other)
PVC/CPVC Schedule 80 (other)

1-2. GENERAL. Contractor shall provide pipe supports, anchors, flexible couplings, and expansion joints for all piping systems. The Drawings indicate pipe supports, anchors, flexible couplings, and expansion joints for pipes larger than 12 inches in diameter, and in special cases for pipes that are 12 inches and smaller. Contractor shall design anchors, pipe supports, expansion joints, and flexible couplings not already shown on the Drawings, in accordance with the requirements specified herein.

Contractor's design shall include pipe supports, bracing, and anchorage adjacent to expansion joints, couplings, valves, in-line devices, equipment, wyes and tees, or changes in direction as required for dismantling piping, removing valves or other in-line devices, disconnecting piping from equipment, and pipe support, in addition to supports in accordance with the maximum spacing specified herein. The pipe support system design by Contractor shall rigidly support pipe so there is no visible movement or visible sagging between supports. The system shall comply with specified piping code requirements.

Contractor shall not delete or relocate the supports, expansion joints, or couplings indicated on the Drawings without written approval of Engineer.

1-2.01. General Equipment Stipulations. The General Equipment Stipulations shall apply to all supports furnished under this section. If requirements in this specification differ from those in the General Equipment Stipulations, the requirements specified herein shall take precedence.

1-3. SUBMITTALS. Complete data, catalog information, and drawings covering fabricated pipe supports, fabricated inserts, and stainless steel, galvanized, and

copper-plated and plastic-coated pipe supports shall be submitted in accordance with the Submittals Procedures section.

Data shall include a listing of the intended use and general location of each item submitted.

When a wind and/or seismic design is required, Contractor shall submit confirmation of compliance with the Meteorological and Seismic Design Criteria section.

PART 2 - PRODUCTS

2-1. MATERIALS. Unless otherwise indicated, all pipe supports shall comply with ANSI/MSS SP-58 and MSS SP-69. All pipe support materials shall be packaged as necessary to ensure delivery in satisfactory condition.

Unless otherwise specified or indicated on the Drawings, pipe supports shall be fabricated of manufacturer's standard materials and provided with manufacturer's standard finish.

Design loads for inserts, brackets, clamps, and other support items shall not exceed the manufacturer's recommended loads.

Pipe supports shall be manufactured for the sizes and types of pipe to which they are applied. Strap hangers will not be acceptable. Threaded rods shall have sufficient threading to permit the maximum adjustment available in the support item. Continuously threaded rod is not acceptable for hanger rods over 12 inches in length.

Unless accepted by Engineer, the use of supports which rely on stressed thermoplastic components to support the pipe will not be permitted.

Contact between dissimilar metals, including contact between stainless steel and carbon steel, shall be prevented. Portions of pipe supports which come into contact with other metals that are dissimilar shall be rubber or vinyl coated.

Supports for brass or copper pipe or tubing shall be copper plated or plastic coated.

Stainless steel supports shall be AISI Type 304 or 316 stainless steel, except for stainless steel supports fabricated by welding which shall be AISI Type 304L or 316L.

Hot-dip galvanized supports shall be in accordance with ASTM A153 and A385.

Pipe support types and application shall comply with Table 1.

2-2. WIND AND SEISMIC LOADS. Wind and seismic loads for worst case conditions of either full, partially full, or empty pipes shall be considered in the design. Seismic design requirements for products specified herein shall be as indicated in the Meteorological and Seismic Design Criteria section.

PART 3 - EXECUTION

3-1. APPLICATION. Concrete inserts or anchor bolts shall be used to support piping from new cast-in-place concrete. Fastening of supports to existing concrete and masonry shall be in accordance with the Anchorage in Concrete and Masonry section.

Anchorage shall be provided to resist thrust due to temperature changes, changes in diameter or direction, or dead-ending. Anchors shall be located as specified to force expansion and contraction movement to occur at expansion joints, loops, or elbows, and as needed to prevent excessive bending stresses and opening of mechanical couplings. Anchorage for temperature changes shall be centered between elbows and mechanical joints used as expansion joints. Anchorage for bellows type expansion joints may be located adjacent to the joint.

When expansion joints are required, pipe guides shall be provided adjacent to bellows type expansion joints. Guides will not be required where mechanical couplings are permitted as expansion joints. Guides shall be located on both sides of expansion joints, except where anchors are adjacent to the joint. Unless otherwise indicated on the Drawings, one guide shall be within four pipe diameters from the joint and a second guide within 14 pipe diameters from the first guide. Pipe supports shall allow adequate movement; pipe guides shall not be used for anchoring pipe against longitudinal forces. Pipe guides shall be provided at locations as recommended by the manufacturer.

Pipe supports for insulated cold piping systems shall be sized for the outside diameter of the insulated pipe, and an insulation protection shield shall be installed between the support and the insulation. Rigid insulation inserts shall be installed between the pipe and the insulation shields for piping larger than 2 inches or when needed to prevent crushing of the insulation. Inserts shall be of the same thickness as the adjacent insulation and shall be vapor sealed.

Insulated hot piping systems shall be supported by clevises, clamps, support saddles, or rollers. Pipe clamps shall be attached directly to the pipe. Support saddles and rollers shall be sized for the outside diameter of the insulated pipe, and an insulation protection saddle shall be installed at the support.

3-2. TYPES OF SUPPORTS. The products for pipe supports shall be as indicated in Table 1 for the specified type and size of support. Where stainless steel is specified for pipe supports but is not available from the name suppliers

for the model specified in Table 1, Contractor shall provide a heavier duty support that is available in stainless steel.

TABLE 1 - TYPES OF SUPPORTS

Description and Service	MSS SP 69 Type (Note 1)	Specification
Hangers		
2-1/2 inch and smaller pipe		
For hot and cold insulated piping		
Clevis	1	B-Line "B3100", Anvil "260" Piping Technology & Products Fig. 83.
Other services		
J-style	5	B-Line "B3690", Anvil "67", Unistrut "J Hanger", or Piping Technology & Products Fig. 67.
Clevis	1	B-Line "B3104", Anvil "260", or Piping Technology & Products Fig 83.
3 Through 12 inch pipe (Note 3)		
For hot insulated piping		
Double bolt	3	B-Line "B3144", Anvil "295", or Piping Technology & Products Fig. 70.
For cold insulated piping		
Clevis	1	B-Line "B3100", Anvil "260", or Piping Technology & Products Fig 83 .
For uninsulated cold piping		
Clamp	4	B-Line "3140", Anvil "212", or Piping Technology & Products Fig. 50.
Clevis	1	B-Line "B3100", Anvil "260", or Piping Technology & Products Fig 83.
Other services		

TABLE 1 - TYPES OF SUPPORTS

Description and Service	MSS SP 69 Type (Note 1)	Specification
Clevis	1	B-Line "B3100" or Anvil "260" for steel pipe; B-Line "B3102", Anvil "590", or Piping Technology & Products Fig. 83 C. L. for cast iron pipe.
Concrete Inserts, Steel		
12 inch and smaller pipe	18	Channel 12 ga , galv, 1-5/8 by 1-3/8 inches, min. 8 inches long, anchor lugs on 4 inch centers, at least three lugs, end caps, and filler strip.
Beam Clamps, Malleable Iron or Steel, 12 inch and smaller pipe	21	B-Line "3050" and "3055", Anvil "133" and "134", or Piping Technology & Products Fig. 130 and Fig. 130 (SP).
	28, 29	Anvil "292" or Piping Technology & Products Fig. 140.
	30	B-Line "3054", Anvil "228", or Piping Technology & Products Fig. 140.
Side Beam Bracket	34	B-Line "B3062", Anvil "202", or Piping Technology & Products Fig. 20L.
Wall Supports and Frames, Steel, 12 inch and smaller pipe (Note 2)		
Brackets	32	B-Line "B3066", Anvil "195", or Piping Technology & Products Fig. 76.
	33	B-Line "B3067", Anvil "199", or Piping Technology & Products Fig. 76.
Prefabricated channels	--	12 ga, galv, 1-5/8 inches, with suitable brackets and pipe clamps.
Offset pipe clamp, 1-1/2 inch and smaller pipe	--	Galv, 1-1/4 by 3/16 inch steel, with 3/8 inch bolts.

TABLE 1 - TYPES OF SUPPORTS

Description and Service	MSS SP 69 Type (Note 1)	Specification
Offset pipe clamp, 2 to 3-1/2 inch pipe	--	Galv, 1-1/4 by 1/4 inch steel, with 3/8 inch bolts.
Floor Supports, Steel or Cast Iron		
6 inch and smaller pipe	37 (with base)	B-Line "B3090", Anvil "259" or Piping Technology & Products Fig. 48.
8 through 12 inch pipe	38	B-Line "B3093", Anvil "264" or Piping Technology & Products Fig. 46.
Pipe Alignment Guides	--	B-Line "B3281" through "B3287", Anvil "255", or Piping Technology & Products Fig. 6.
Turnbuckles Steel	13	B-Line "B3202", Anvil "230", or Piping Technology & Products Fig. 30.
Hanger Rods, Carbon Steel, Threaded Both Ends, 3/8 inch minimum size	--	B-Line "B3205", Anvil "140", or Piping Technology & Products Fig. 128.
Weldless Eye Nut, steel	17	B-Line "B3200", Anvil "290", or Piping Technology & Products Fig. 40.
Insulation Protection Saddle	39	B-Line "B3160 Series", Anvil "160 Series", or Piping Technology & Products Fig. 184.
Insulation Protection Shield	40	B-Line "B3151", Anvil "167", or Piping Technology & Products Fig. 183.

Table 1 Notes:

1. MSS SP-69 supports and hangers are illustrated on Figure 1-15140.
2. Pipe clamps or other devices which rely on the application of a clamping force to the supported pipe in order to maintain the clamp position or location in a prefabricated channel or track will not be acceptable for use with nonmetallic pipe or tubing.
3. Alternatively, pipe hangers for 12 inch pipe may be saddle type as indicated on the Drawings.

3-3. SUPPORT SPACINGS. Pipe supports and expansion joints shall be spaced in accordance with Table 2. The types of pipes to be supported are as specified herein. Table 2 covers spacings for the standard operating conditions specified for each pipe material. Spacing in the table is the maximum spacing considering gravity loads. Where Contractor's design includes lateral and longitudinal forces due to seismic loads, wind loads, and other forces, the spacing requirement may be less than that indicated in the table.

TABLE 2 – MAXIMUM PIPE SUPPORT SPACING AT STANDARD TEMPERATURES AND SERVICES

Type of Pipe	Pipe Support Max Spacing feet [m]	Max Run Without Expansion Joint, Loop, or Bend (Note 1) feet [m]	Expansion Joint Max Spacing (Note 2) feet [m]	Type of Expansion Joints
Copper, for services other than hot water				
1 inch [25 mm] and smaller	5 [1.5]	--	--	Note 7
Over 1 inch [25 mm]	7 [2.1]	50 [15.2]	100 [30.5]	Note 3
PVC, Schedule 80, for other services at a maximum temperature of 100°F [38°C] and a maximum specific gravity of 1.0.				
1/8 and 1/4 inch [3 and 6 mm]	Continuous Support	20 [6.1]	60 [18.3]	Note 3
1/2 inch [13 mm]	4 [1.2]	20 [6.1]	60 [18.3]	Note 3
3/4 inch [19 mm]	4-1/2 [1.3]	20 [6.1]	60 [18.3]	Note 3
1 and 1-1/4 inch [25 and 31 mm]	5 [1.5]	20 [6.1]	60 [18.3]	Note 3
1-1/2 and 2 inch [38 and 50 mm]	5-1/2 [1.6]	20 [6.1]	60 [18.3]	Note 3
2-1/2 inch [63 mm]	6 [1.8]	20 [6.1]	60 [18.3]	Note 3
3 inch [75 mm]	7 [2.1]	20 [6.1]	60 [18.3]	Note 3
4 inch [100 mm]	7-1/2 [2.3]	20 [6.1]	60 [18.3]	Note 3

Table 2 Notes:

1. Expansion joint fittings are specified in the respective piping sections.
2. Expansion joints shall be mechanical couplings.

3-4. INSTALLATION.

3-4.01. General. All piping shall be supported in a manner which will prevent undue stress on any valve, fitting, or piece of equipment. In addition, pipe supports shall be provided at changes in direction or elevation, and adjacent to flexible couplings. Pipe supports and hangers shall not be installed in equipment access areas.

Where horizontal piping is arranged with two or more parallel lines, trapeze hangers may be used in lieu of individual hangers. Trapeze assembly shall consist of structure attachments as previously specified with rod size dependent upon total weight supported. Spacing of assemblies shall be determined by the minimum pipe size included in the group supported. Trapeze horizontal assemblies shall be structural angle or channel section of sufficient size to prevent measurable sag between rods when pipes are full. All lines shall be attached to the horizontal with intermediate pipe guides and U-bolts or one-hole clamps. Pre-engineered support equipment may be used when selected and installed in accordance with the manufacturer's recommendations.

Where copper pipe is installed on a support system of dissimilar metal with other pipes, the copper pipe shall be galvanically isolated from the support using Neoprene strips or other material acceptable to Engineer.

No piping shall be supported from the pipe above.

Horizontal piping hanger support rods shall attach to steel beams with center-loading I-clamps, or welded beam clips. Hanger support rods shall attach to concrete slabs or beams with inserts.

Anchorage shall be provided to resist both lateral and longitudinal seismic forces.

3-4.02. Inserts. Concrete inserts or anchor bolts shall be used to support piping from new cast-in-place concrete. Fastening of supports to existing concrete and masonry shall be in accordance with the Anchorage in Concrete and Masonry section. Reference building structural concrete Drawings for concrete inserts. When not provided as part of the building concrete structure, provide inserts for suspending hangers from reinforced concrete slabs and sides of reinforced concrete beams.

Where concrete slabs form finished ceilings, provide inserts flush with the slab surface.

Where inserts are omitted, drill through concrete slab from below and provide thru-bolt with recessed square steel plate and nut recessed into and grouted flush with slab. NDE (Non-Destructive Evaluation) shall be used to locate existing reinforcing before drilling.

3-4.03. Pipe Hangers and Supports. Install hangers to provide a minimum 1/2 inch space between finished covering and adjacent work.

A hanger shall be placed within 18 inches of each horizontal elbow, and on both sides of all piping accessories and valves weighing 20 lbs or more.

Hangers shall have 1-1/2 inches minimum vertical adjustment.

Support horizontal cast iron, ductile iron and no-hub piping systems adjacent to each joint.

Support vertical piping at every floor using riser clamps.

Support riser piping independently of connected horizontal piping.

Hanger and hanger components shall be sized specifically for the pipe size it is to be used on.

3-5. PLACEMENT. The maximum spacing for pipe supports and expansion joints shall be as indicated in Table 2.

Rubber hose and flexible tubing shall be provided with continuous angle or channel support.

Unless otherwise indicated on the Drawings or acceptable to Engineer, piping shall be supported approximately 1-1/2 inches out from the face of walls and at least 3 inches below ceilings.

End of Section

Section 15180

VALVE AND GATE ACTUATORS

PART 1 - GENERAL

1-1. SCOPE. This section covers furnishing manual and powered valve and gate actuators and accessories as specified herein.

1-2. GENERAL. Equipment provided under this section shall be fabricated and assembled in full conformity with Drawings, specifications, engineering data, instructions, and recommendations of the equipment manufacturer, unless exceptions are noted by Engineer.

Actuators shall be furnished with all necessary parts and accessories indicated on the Drawings, specified, or otherwise required for a complete, properly operating installation and shall be the latest standard products of a manufacturer regularly engaged in the production of actuators.

1-2.01. General Equipment Stipulations. The General Equipment Stipulations shall apply to all equipment furnished under this section. If requirements in this specification differ from those in the General Equipment Stipulations, the requirements specified herein shall take precedence.

1-2.02. Governing Standards. Except as modified or supplemented herein, cylinder and vane type actuators shall conform to applicable requirements of ANSI/AWWA C541.

Except as modified or supplemented herein, electric motor actuators shall conform to applicable requirements of ANSI/AWWA C542.

Except as modified or supplemented herein, actuators for butterfly and eccentric plug valves shall conform to the applicable requirements of ANSI/AWWA C504.

Except as modified or supplemented herein, manual actuators for ball valves shall conform to the applicable requirements of ANSI/AWWA C507.

Except as modified or supplemented herein, actuators for cast-iron slide gates shall conform to the applicable requirements of ANSI/AWWA C560.

Except as modified or supplemented herein, actuators for open channel slide gates and weir gates shall conform to the applicable requirements of ANSI/AWWA C513.

Except as modified or supplemented herein, actuators for stainless steel slide gates shall conform to the applicable requirements of ANSI/AWWA C561.

Except as modified or supplemented herein, actuators for composite slide gates shall conform to the applicable requirements of ANSI/AWWA C563.

1-2.03. Power Supply. Not used.

1-2.04. Marking. Each actuator shall be marked with the manufacturer's name, model number, and the country of origin. An identifying serial number shall be stamped on a corrosion-resistant plate attached to the actuator.

1-2.05. Temporary Number Plates. Each actuator shall be factory tagged or marked to identify the actuator and the applicable valve or gate by number or service as indicated in the valve or gate schedule.

1-3. SUBMITTALS. Complete drawings, details, and specifications covering the actuators and their appurtenances shall be submitted in accordance with the Submittal Procedures section. Submittal drawings shall clearly indicate the country of origin of each actuator and its components.

Submittal drawings shall include separate wiring diagrams for each electrically operated or controlled actuator and the electrical control equipment. Each actuator drawing shall be identified with the respective valve number or name.

For electric or cylinder actuators, certified copies of reports covering proof-of-design testing of the actuators as set forth in Section 5 of ANSI/AWWA C541 or ANSI/AWWA C542 respectively, together with an affidavit of compliance as indicated in Section 6.3 of ANSI/AWWA C541 or ANSI/AWWA C542 respectively, shall be submitted to Engineer before the actuators are shipped.

PART 2 - PRODUCTS

2-1. PERFORMANCE AND DESIGN REQUIREMENTS.

2-1.01. General. Actuators and appurtenances shall be designed for the conditions and requirements as indicated in the respective valve and gate sections.

Liberal factors of safety shall be used throughout the design, especially in the design of parts subject to intermittent or alternating stresses. In general, working stresses shall not exceed one-third of the yield point or one-fifth of the ultimate strength of each material.

2-1.02. Valve Actuators. Each actuator shall be designed to open or close the valve under all operating conditions. Actuators shall be designed for the maximum pressure differential across the valve and maximum velocities through the valve where indicated in the respective valve schedules.

Valve actuators shall be provided and adjusted by the valve manufacturer. Actuator mounting arrangements and positions shall facilitate operation and maintenance and shall be determined by the valve manufacturer unless indicated otherwise on the Drawings or directed by Engineer.

2-1.03. Gate Actuators. Actuators shall be sized to produce the torque or thrust required to operate the gate when subject to the seating and unseating operating heads as indicated in the respective gate schedules.

Both the design head and the operating head shall be measured from the surface of the liquid to the center line of the gate.

2-1.04. Limit Switches. Limit switches shall be provided as indicated on the Drawings or in the valve and gate schedules.

Limit switches for intelligent and standard electric actuators shall be as indicated in their respective paragraphs.

2-2. MATERIALS. Except as modified or supplemented herein, materials used in the manufacture of actuators shall conform to the requirements of the applicable governing standard(s).

2-3. VALVE MANUAL ACTUATORS.

2-3.01. General. Manual actuators of the types listed in the valve specifications or schedules shall be provided by the valve manufacturer.

Unless otherwise indicated or specified, each geared manual actuator shall be equipped with an operating handwheel.

The direction of rotation of the wheel, wrench nut, or lever to open the valve shall be to the left (counterclockwise). Each valve body or actuator shall have cast thereon the word "Open" and an arrow indicating the direction to open.

The housing of traveling-nut type actuators shall be fitted with a removable cover which shall permit inspection and maintenance of the operating mechanism without removing the actuator from the valve. Travel limiting devices shall be provided inside the actuator for the open and closed positions. Travel limiting stop nuts or collars installed on the reach rod of traveling-nut type operating mechanisms shall be field adjustable and shall be locked in position by means of a removable roll pin, cotter pin, or other positive locking device. The use of stop nuts or adjustable shaft collars which rely on clamping force or setscrews to prevent rotation of the nut or collar on the reach rod will not be acceptable.

Each actuator shall be designed so that shaft seal leakage cannot enter the actuator housing.

Valves for throttling service shall be equipped with an infinitely variable locking device or a totally enclosed gear actuator.

Actuators shall produce the required torque with a maximum pull of 80 lbs on the lever, handwheel, or chain. Actuator components shall withstand, without damage, a pull of 200 lbs on the handwheel or chainwheel or an input of 300 foot-lbs on the operating nut.

2-3.02. Handwheels. Handwheel diameters shall be at least 8 inches but not more than 24 inches for 30 inch and smaller valves and not more than 30 inches for 36 inch and larger valves.

2-3.03. Chainwheels. Unless otherwise specified in the valve schedules, all valves with center lines more than 7'-6" above the floor shall be provided with chainwheels and operating chains. Each chainwheel operated valve shall be equipped with a chain guide which will permit rapid handling of the operating chain without "gagging" of the wheel and will also permit reasonable side pull on the chain. Suitable extensions shall be provided, if necessary, to prevent interference of the chain with adjacent piping or equipment. Operating chains shall be hot-dip galvanized or zinc plated carbon steel and shall be looped to extend to within 4 feet of the floor below the valve.

2-3.04. Levers. Levers shall be capable of being locked in at least five intermediate positions between fully open and fully closed. In any building or structure containing lever operated valves, at least two operating levers shall be provided for each size and type of lever operated valve.

2-3.05. Chain Levers. Suitable actuator extensions shall be provided, if necessary, to prevent interference of the chain with adjacent piping or equipment. Operating chains shall be hot-dip galvanized carbon steel and shall be looped to extend to within 4 feet of the floor below the valve.

2-3.06. Wrench Nuts. Unless otherwise specified in the valve schedules or on the Drawings, wrench nuts shall be provided on all buried valves and on all valves that are to be operated through floor boxes. Unless otherwise directed by Owner, all wrench nuts shall comply with Section 4.4.13 of ANSI/AWWA C500. At least two operating keys shall be furnished for operation of the wrench nut operated valves.

2-3.07. Operating Stands. Operating stands shall be provided in the locations indicated on the Drawings or as indicated in the valve and gate schedules. Operating stands shall support the handwheel approximately 36 inches above the floor. A sleeve made from standard weight galvanized steel pipe shall be provided for the opening in the floor beneath each operating stand. When stems are 10 feet or longer, a suitable thrust bearing shall be provided in each operating stand to carry the weight of the extension stem.

2-3.08. Wall Brackets. Wall brackets shall be provided to support manual actuators in the locations indicated on the Drawings or in the respective valve schedules. The horizontal face of the bracket shall be predrilled to accept the actuator and the stem without modification. The top of the bracket shall extend sufficiently to bear on and transfer thrust loads to the top of the supporting structure.

2-4. GATE MANUAL ACTUATORS. Not used.

2-5. INTELLIGENT ELECTRIC ACTUATORS. Not used.

2-6. STANDARD ELECTRIC ACTUATORS. Not used.

2-7. HYDRAULIC CYLINDER ACTUATORS. Not used.

2-8. AIR CYLINDER ACTUATORS. Not used.

2-9. VANE TYPE PNEUMATIC ACTUATORS. Not used.

2-10. AIR-OIL CYLINDER ACTUATORS. Not used.

2-11. PORTABLE ELECTRIC ACTUATORS. Not used.

2-12. PORTABLE HYDRAULIC ACTUATORS. Not used.

2-13. ACTUATOR ACCESSORIES.

2-13.01. Extension Stems. Extension stems and stem guides shall be furnished when indicated in the respective valve schedules, indicated on the Drawings, or otherwise required for proper valve operation. Extension stems shall be of solid steel and shall be not smaller in diameter than the stem of the actuator shaft. Extension stems shall be connected to the actuator with a single Lovejoy "Type D" universal joint with grease-filled protective boot. All stem connections shall be pinned.

At least two stem guides shall be furnished with each extension stem, except for buried valves. Stem guides shall be of cast iron, bronze bushed, and adjustable in two directions. Stem guide spacing shall not exceed 100 times the stem diameter or 10 feet, whichever is smaller. The top stem guide shall be designed to carry the weight of the extension stem. The extension stem shall be provided with a collar pinned to the stem and bearing against the stem thrust guide.

Extension stems for chemical resistant butterfly valves located in drainage sumps shall be the two-piece type with stainless steel stem, PVC housing, wall support, and collar. Unless otherwise indicated on the Drawings, the length of the stem extension shall be as necessary to position the valve operator 12 inches above the maximum liquid level in the immediate area.

Extension stems for buried valve actuators shall extend to within 6 inches of the ground surface, shall be centered in the valve box using spacers, and shall be equipped with a wrench nut.

Extension stems for buried valve actuators shall be provided with position indicators as specified in the valve schedules.

2-13.02. Position Indicators. Unless otherwise specified, each valve actuator shall be provided with a position indicator to display the position of the plug or disc relative to the body seat opening.

For quarter turn plug, ball, or cone type valves installed in interior locations, the indicating pointer shall be mounted on the outer end of the valve operating shaft extension and shall operate over an indicating scale on the operating mechanism cover. Where the shaft passes through the cover, a suitable stuffing box or other seal shall be provided to prevent the entrance of water.

Each actuator for butterfly valves, except where located in manholes, buried, or submerged, shall have a valve disc position indicator mounted on the end of the valve shaft. A disc position indicator shall also be provided on each operating stand or the actuator mounted thereon.

2-13.02.01. Position Indicators for Buried Actuators. Not used.

2-13.03. Floor Boxes. Openings through concrete slabs provided for key operation of valves shall be provided with a cast iron floor box complete with cover. The floor box shall be of the depth indicated on the Drawings. Where the operating nut is in the slab, the stem shall have a guide to maintain the nut in the center of the box; where the nut is below the slab, the opening in the bottom of the box shall accommodate the operating key.

Each floor box and cover shall be shop coated with manufacturer's standard coating.

2-13.04. Torque Tubes. Torque tube shall utilize pipe rather than solid shafting between the valve input shaft and the output shaft of the valve floorstand operator. An adjustment of 2 inches shall be provided in the torque tube installation. Torque tube shall be coated with the same material as the submerged valve.

2-13.05. Valve Boxes. Not used.

2-14. SHOP PAINTING. All ferrous metal surfaces, except bearing and finished surfaces and stainless steel components of valve actuators and accessories, shall be shop painted for corrosion protection. The valve manufacturer's standard coating will be acceptable, provided it is functionally equivalent to the specified coating and is compatible with the specified field painting.

The following surfaces shall be painted:

Polished or Machined Surfaces	Rust-preventive compound.
Other Surfaces	Epoxy.

Actuators and Accessories	Universal primer.

PART 3 - EXECUTION

3-1. INSTALLATION. Actuators will be installed on the valves in accordance with the Valve Installation section and on gates in accordance with the Gate Installation section.

End of Section

Section 15250

MECHANICAL INSULATION

PART 1 - GENERAL

1-1. SCOPE. This section covers the furnishing and installation of insulation, jackets, and accessories for the following mechanical systems:

- piping

Building insulation materials are specified in other sections. Insulation for mechanical equipment which is to be applied at the factory prior to shipment is specified in the individual equipment sections.

1-2. GENERAL. Materials furnished and installed under this section shall be in full conformity with the Drawings, Specifications, engineering data, instructions, and recommendations of the equipment manufacturer unless exceptions are noted by Engineer.

1-2.01. Coordination. Contractor shall be responsible for coordinating the installation of insulation with the installation of the items or systems to be insulated. Each item or system shall be tested and accepted by Engineer before installation of the insulation materials.

Contractor shall verify that each component of the insulation systems is compatible with all other parts of the system; that all insulation materials are appropriate for the intended applications; and that all necessary devices and accessories have been provided.

All insulation of the same class shall be the product of a single manufacturer; however, all the insulation types need not be the products of one manufacturer.

1-2.02. General Equipment Stipulations. The General Equipment Stipulations shall apply to all equipment furnished under this section. If requirements in this specification differ from those in the General Equipment Stipulations, the requirements specified herein shall take precedence.

1-2.03. Governing Standards. Except as modified or supplemented herein, all work covered by this section shall be performed in accordance with all applicable municipal codes and ordinances, laws, and regulations. In case of a conflict between this section and any state law or local ordinance, the latter shall govern.

All work shall comply with UL, NFPA, and ASTM safety requirements.

1-2.04. Metal Thickness. Metal thickness and gages specified herein are minimum requirements. Gages refer to US Standard gage.

1-2.05. Surface Burning Characteristics. Insulation, jackets, tapes, and adhesives to be used indoors shall have a composite flame spread rating not to exceed 25 and a composite smoke developed rating of 50 when tested by UL 723, NFPA 255, or ASTM E84. All testing shall be done on materials of the same densities and installed thicknesses as the materials being installed. Insulation materials which have been treated with a flame retardant additive to meet the required flame spread and smoke developed ratings are not acceptable.

1-2.06. Painting and Identification. Field painting and identification shall be as specified in the Protective Coatings section.

1-3. SUBMITTALS.

1-3.01. Drawings and Data. A complete list of materials and catalog cuts, together with detailed specifications, materials performance data, installation instructions, parts, devices, and accessories furnished, shall be submitted in accordance with the Submittals Procedures section. Information shall include certified test results to show compliance with UL, NFPA, and ASTM safety requirements.

1-4. QUALITY ASSURANCE.

1-4.01. Manufacturer Experience. A manufacturer shall have furnished material of the type specified which has been in successful operation for not less than the past 5 years.

1-5. DELIVERY, STORAGE, AND HANDLING. Shipping shall be in accordance with the Product Delivery Requirements section. Handling and storage shall be in accordance with the Product Storage and Handling Requirements section.

PART 2 - PRODUCTS

2-1. ACCEPTABLE MANUFACTURERS. Acceptable manufacturers shall be as listed in the respective product description paragraphs.

2-2. MATERIALS. Insulation, vapor retarders, and field applied jackets shall be installed to cover piping, ductwork, equipment, fittings, and appurtenances as indicated in the Insulation Schedule.

2-2.01. Pipe Insulation.

2-2.01.01. Type PMF1 Insulation. Not used.

2-2.01.02. Type PMW1 Insulation. Not used.

2-2.01.03. Type PFC1 Insulation. Type PFC1 flexible cellular elastomeric pipe insulation shall be Armacell "AP/Armaflex" or K-Flex USA "Insul-Tube" for unslit insulation and Armacell “AP/Armaflex SS” or K-Flex USA “Insul-Lock Seam-Seal” for factory pre-slit insulation. Flexible cellular polyolefin foam insulation shall be IMCOA "Imcolock" or Plastic Technology, Inc. “Innofoam”.

Type PFC1 pipe insulation shall be one-piece, molded elastomeric or polyolefin foam insulation suitable for a temperature range of -40°F to 180°F [-40°C to 82°C], and shall have a maximum thermal conductivity (k) of 0.28 Btu in/hr ft^2 °F at 75°F [0.040 W/m °C at 24°C]. The insulation shall be suitable for exposure to weather and direct sunlight or, where not indicated to be jacketed, shall be given two coats of an ultraviolet-resistant finish recommended by the manufacturer. Insulation shall conform to ASTM C534 for elastomeric or ASTM C1427 for polyolefin.

2-3. ACCESSORIES.

2-3.01. PVC Insulation Jackets. Not used.

2-3.02. Aluminum Insulation Jackets. Aluminum insulation jackets for insulated piping systems shall be furnished and installed as indicated in the insulation schedule herein and where indicated on the Drawings. Aluminum jackets shall be manufactured from alclad conforming with ASTM B209. The aluminum jacket shall have a nominal thickness of 0.024 in. , with an embossed finish.

Fittings in insulated piping systems and equipment where indicated in the insulation schedule shall be provided with aluminum jackets of the same aluminum jacketing material as the piping systems. The jacket shall have a factory-applied moisture retarder of at least 3 mils permanently bonded to the interior surface and extending the full width of the jacket. The retarder shall consist of Polysurlyn or polyethylene film and kraft paper.

PART 3 - EXECUTION

3-1. INSTALLATION.

3-1.01. General. Contractor shall install all insulation materials as specified herein for the piping systems that are not factory insulated. Insulation materials shall be installed in accordance with the manufacturer's written instructions and recommendations. Surfaces to be insulated shall be cleaned and dried. All work shall be performed within the temperature ranges recommended by the insulation product manufacturer. Insulation shall be kept clean and dry and shall remain in

the factory container until it is installed. Packages or factory containers shall bear the manufacturer's stamp or label with the name of the manufacturer and description of materials.

Seams of exposed insulation and jackets shall be in the least visible location.

3-1.02. Piping Insulation.

3-1.02.01. Type PMF1 Insulation. Not used.

3-1.02.02. Type PMW1 Insulation. Not used.

3-1.02.03. Type PFC1 Insulation. Pipe insulation shall be installed to cover all pipe, fittings, and appurtenances with all seams and joints sealed by a factory or field applied adhesive. Insulation at fittings and appurtenances shall be carefully formed and fitted. Insulation at elbows shall be mitered using segments of pipe insulation.

3-1.04. Equipment Insulation. Not used.

3-1.05. PVC Jacketing. Not used.

3-1.06. Aluminum Jacketing. Aluminum jacketing for piping systems shall be installed as specified herein and indicated on the Drawings. Jacketing shall be held in place with stainless steel securing bands uniformly spaced at not more than 18 inches to produce tight joints without "bulging". The jacket shall overlap at least 2 inches at longitudinal and circumferential joints. Joints shall be overlapped and sealed with caulk to prevent moisture penetration, and longitudinal joints shall be placed to shed water. Exposed ends of pipe insulation shall be provided with covers constructed of the same material as the jacketing.

Elbows shall be jacketed with spirally wrapped aluminum strips or individual mitered segments or gores cut to fit the insulation.

3-2. INSULATION SCHEDULE.

INSULATION SCHEDULE				
Service	Size Inches	Mechanical Insulation		Notes
		Type	Thickness Inches	
PIPING - OUTDOOR (EXPOSED)				
Refrigerant	All	PFC1	1	(1)
PIPING - INDOOR (EXPOSED)				
Refrigerant	All	PFC1	1	
HVAC Condensate	All	PFC1	1	

Mechanical Insulation Types: FC - Flexible Cellular
MF - Mineral Fiber
MW - Mineral Wool

Notes:

(1) Aluminum jacket.

Unless otherwise indicated in the insulation schedule, all mechanical piping and accessories with an operating temperature in excess of 140°F or below 60°F shall be insulated.

End of Section