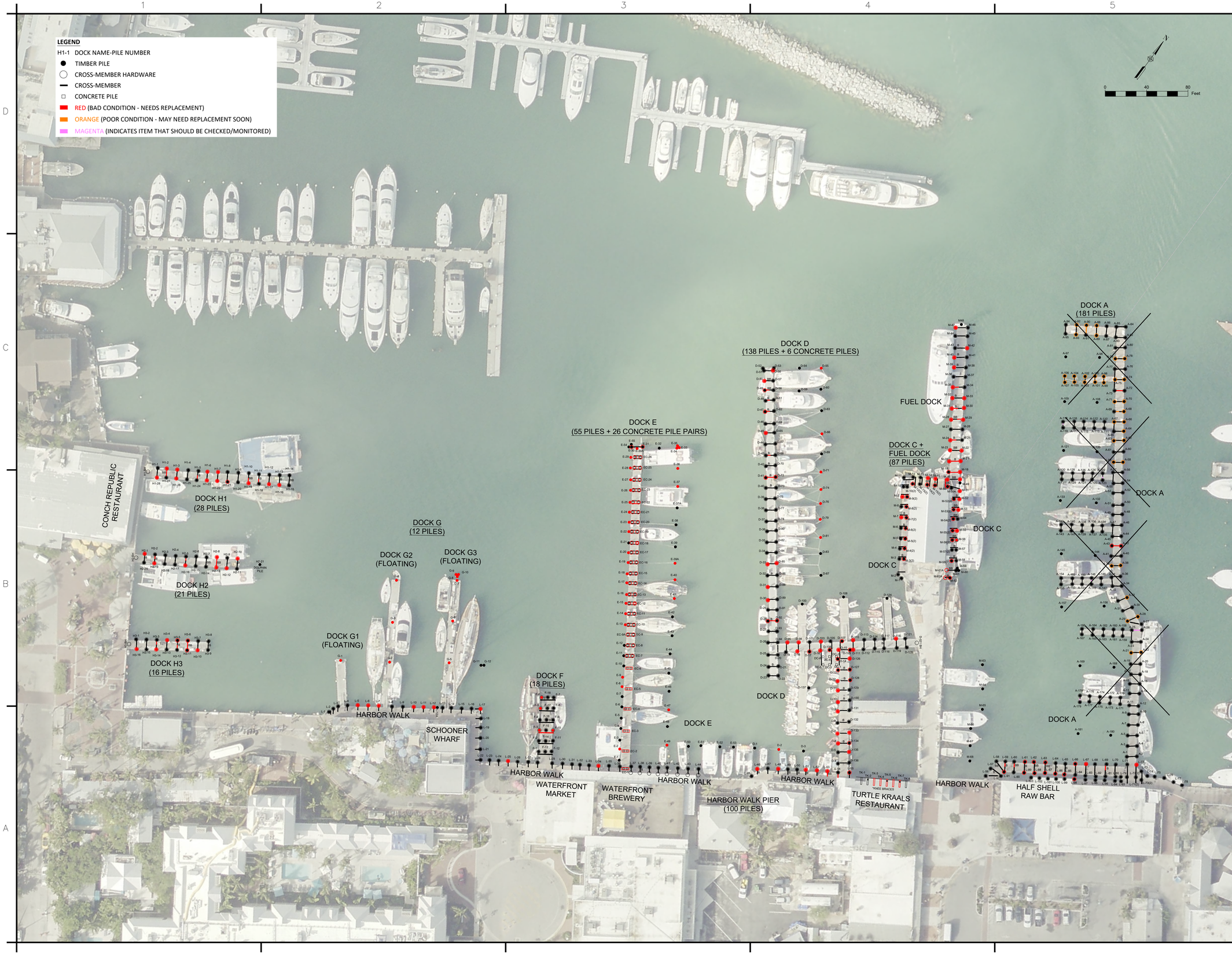

Mark | Description | Date | Appr.

Designed by: —
Drawn By: D. POLSKI
Checked By: —
Reviewed By: —
Design file no: KW_PILES_2021.DWG
Scale: AS SHOWN

TETRA TECH INC.
759 SOUTH FEDERAL HWY
SUITE 314
STUART, FL 34994-2936
TEL: (772) 781-5880
FAX: (772) 781-5411

CERTIFICATE OF AUTHORIZATION NO. 2429

CITY OF KEY WEST
PORT AND MARINE SERVICES
KEY WEST BIGHT MARINA PILE ASSESSMENT

KEY WEST BIGHT PLAN VIEW WITH DEFICIENCIES

KEY WEST, MONROE COUNTY, FLORIDA

Sheet Reference:
C-001
Sheet 1 of 1

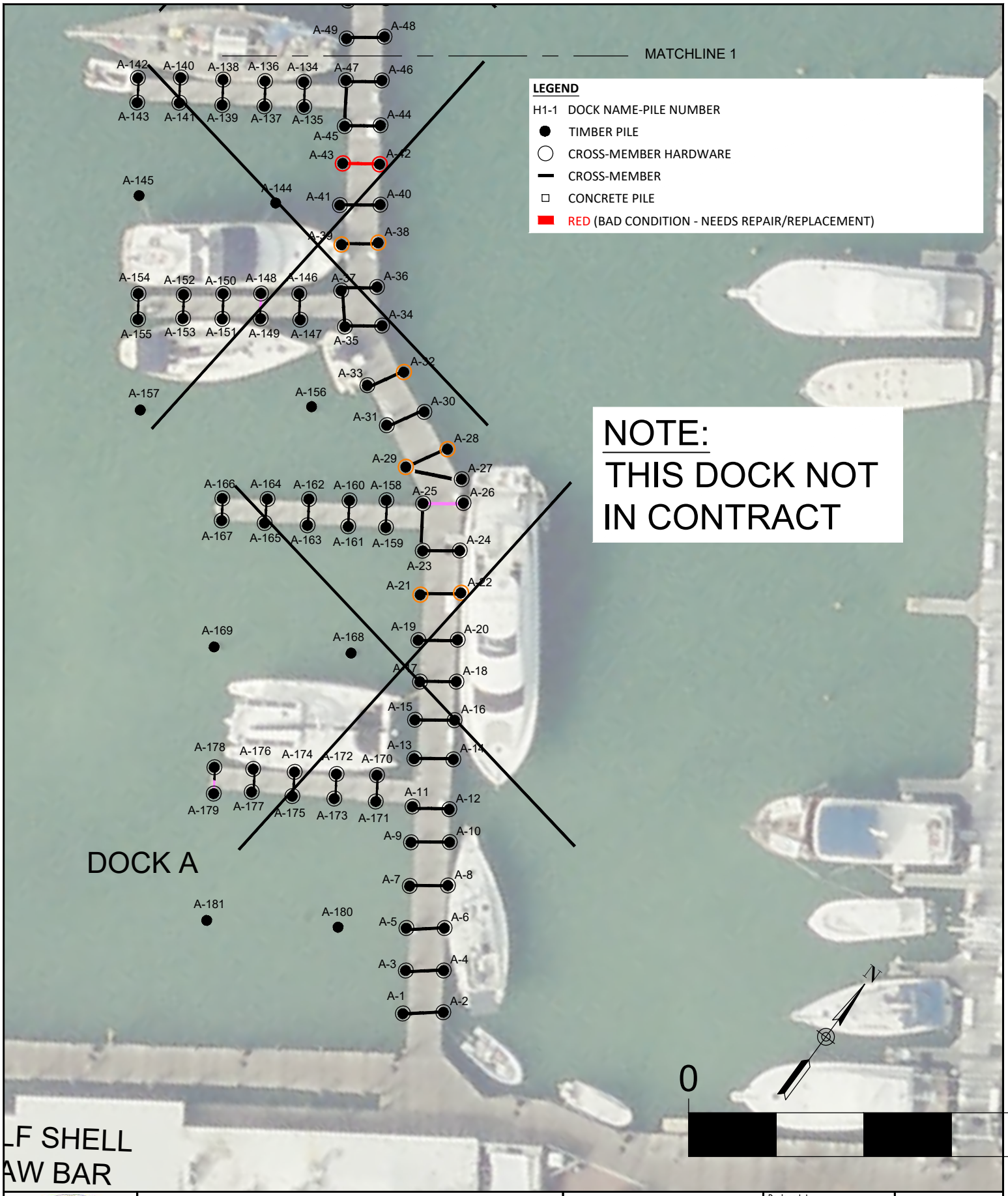

CITY OF KEY WEST
KEY WEST BIGHT MARINA PILE ASSESSMENT

DOCK A PLAN VIEW

KEY WEST, MONROE COUNTY, FLORIDA

TETRA TECH INC.
759 SOUTH FEDERAL HWY
SUITE 314
STUART, FL 34994-2936
TEL: (772) 781-3400
FAX: (772) 781-3411

CERTIFICATE OF AUTHORIZATION NO. 2429

Designed by:	--
Drawn By:	D. POLSKI
Checked By:	--
Reviewed By:	--
Design file no:	KW_PILES_2021.DWG
Scale:	AS SHOWN

Sheet Reference:
G-002
Sheet 2 of 13

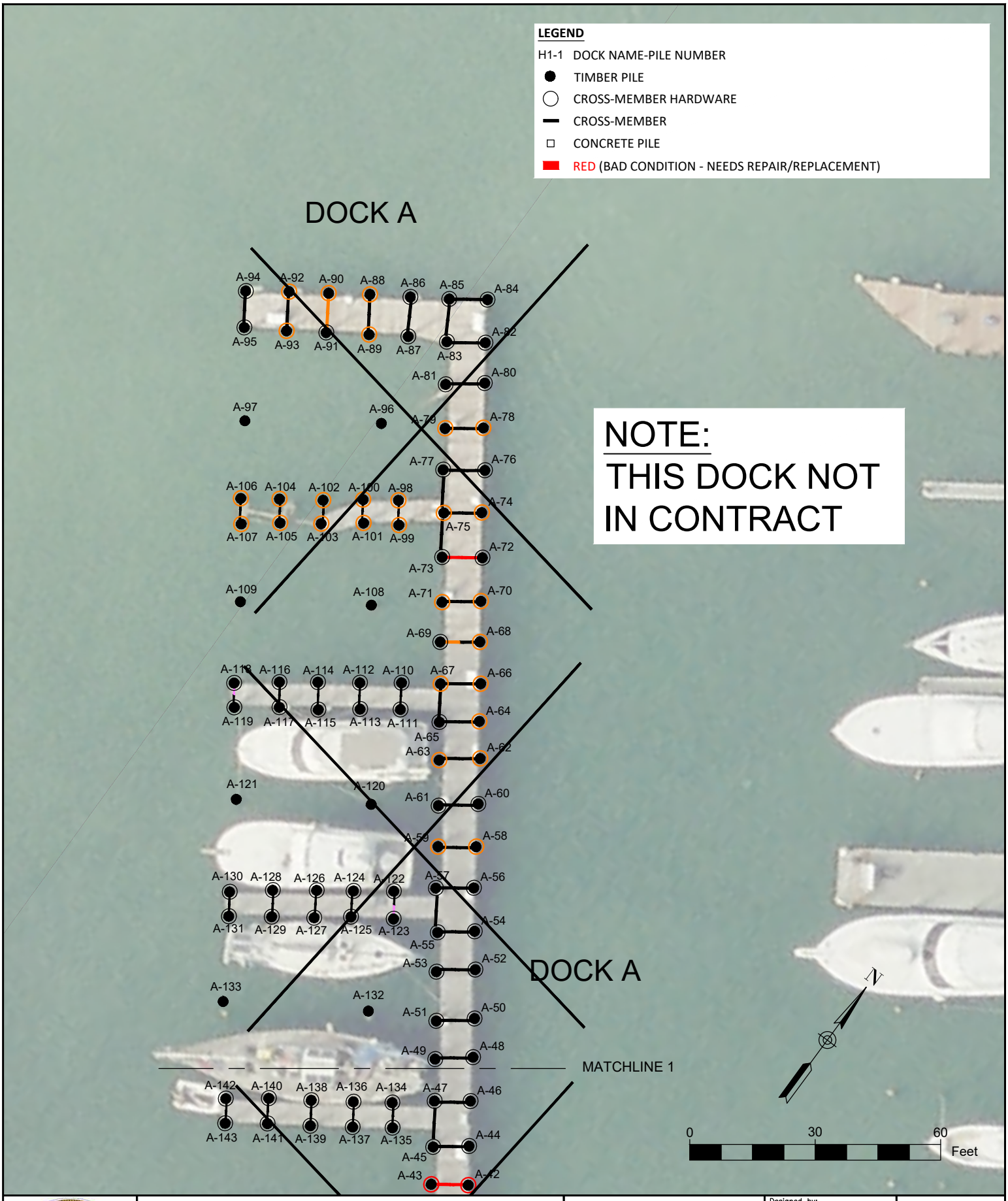

CITY OF KEY WEST
KEY WEST BIGHT MARINA PILE ASSESSMENT

DOCK A PLAN VIEW

KEY WEST, MONROE COUNTY, FLORIDA

TETRA TECH INC.
759 SOUTH FEDERAL HWY
SUITE 314
STUART, FL 34994-2936
TEL: (772) 781-3400
FAX: (772) 781-3411

CERTIFICATE OF AUTHORIZATION NO. 2429

Designed by: --
Drawn By: D. POLSKI
Checked By: --
Reviewed By: --
Design file no: KW_PILES_2021.DWG
Scale: AS SHOWN

Sheet Reference:
G-003
Sheet 3 of 13

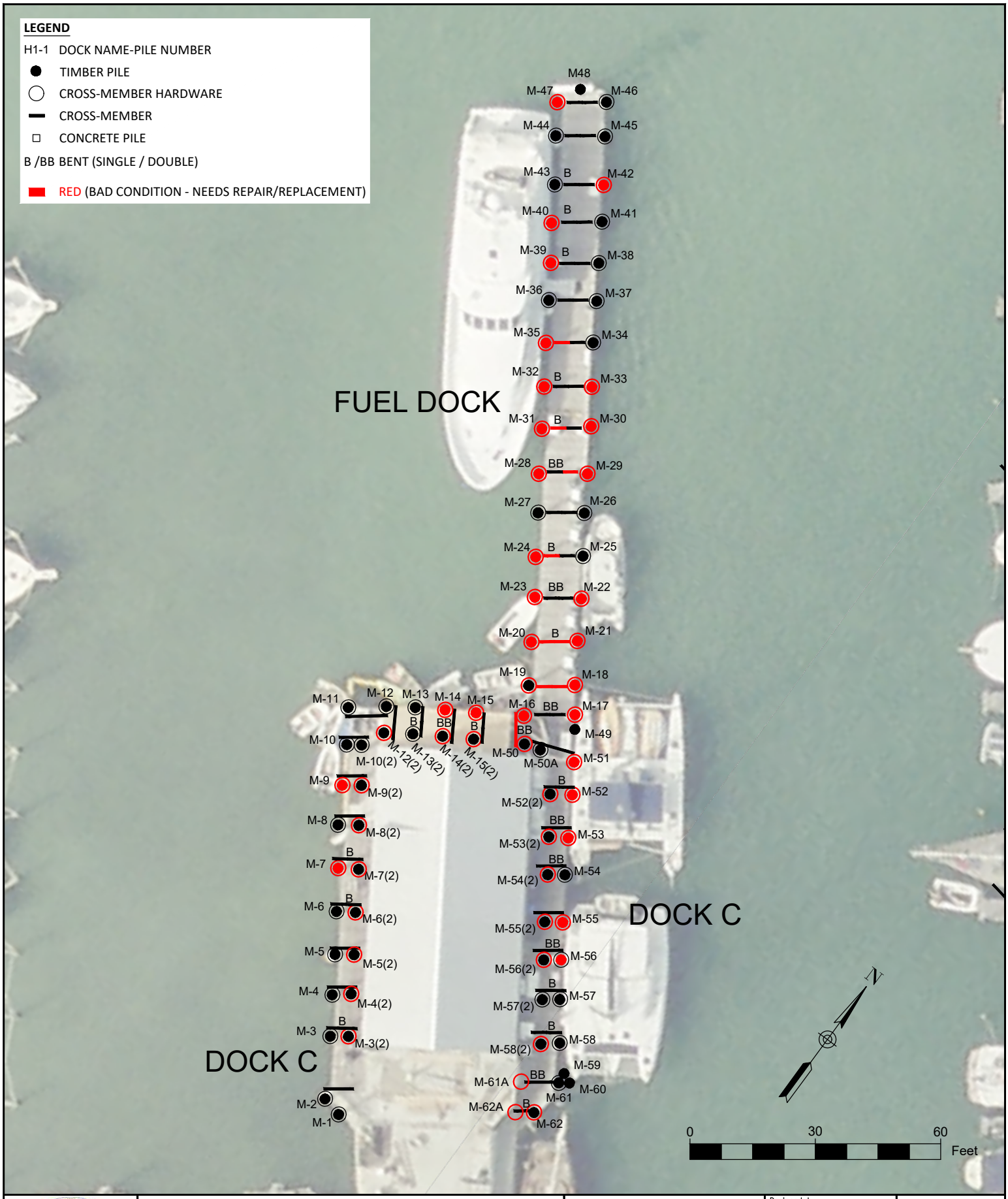

CITY OF KEY WEST
KEY WEST BIGHT MARINA PILE ASSESSMENT

DOCK C AND FUEL DOCK PLAN VIEW

KEY WEST, MONROE COUNTY, FLORIDA

TETRA TECH INC.
759 SOUTH FEDERAL HWY
SUITE 314
STUART, FL 34994-2936
TEL: (772) 781-3400
FAX: (772) 781-3411

CERTIFICATE OF AUTHORIZATION
NO. 2429

Designed by: --
Drawn By: D. POLSKI
Checked By: --
Reviewed By: --
Design file no: KW_PILES_2021.DWG
Scale: AS SHOWN

Sheet Reference:
G-004
Sheet 4 of 13

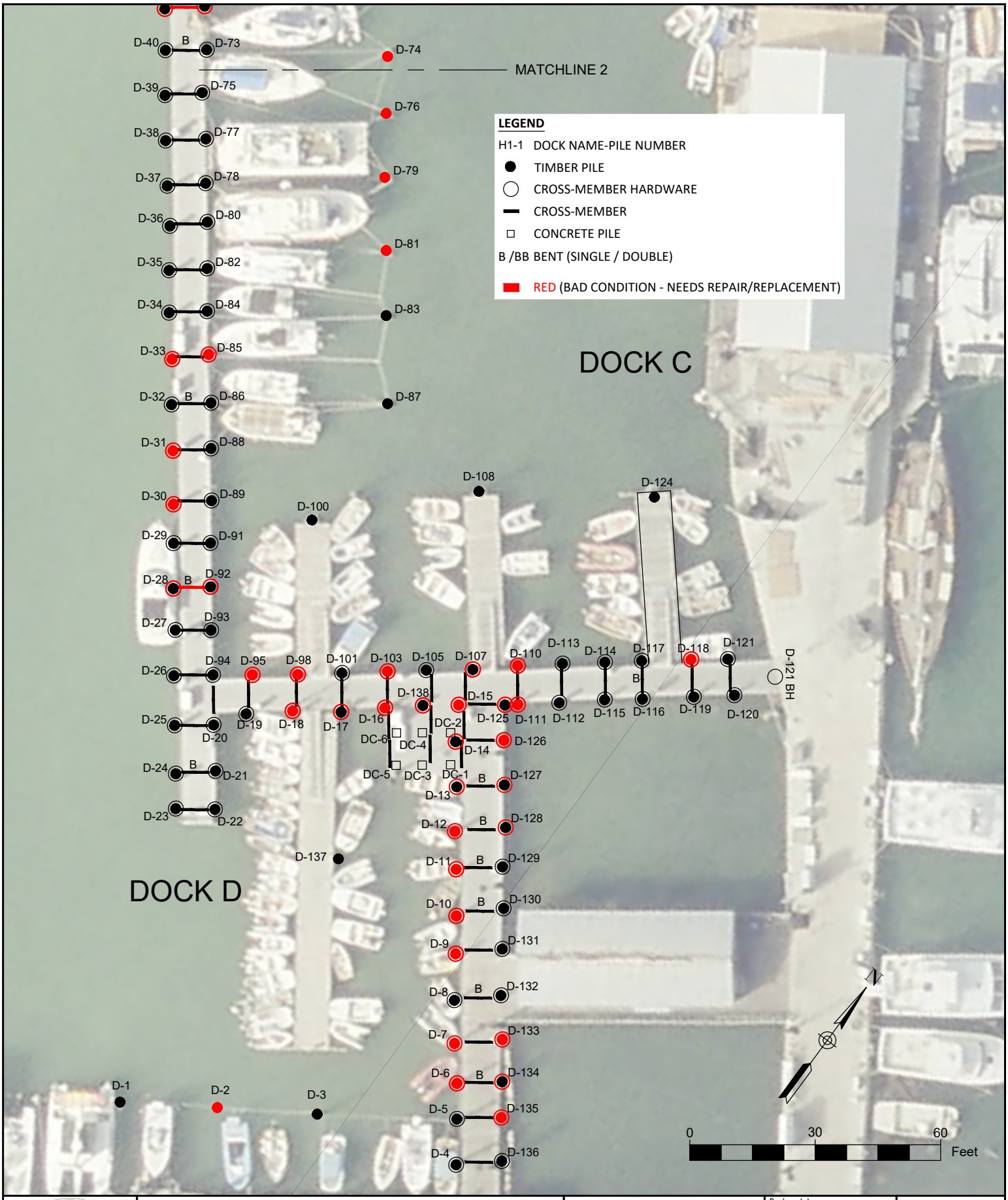

CITY OF KEY WEST
KEY WEST BIGHT MARINA PILE ASSESSMENT

DOCK D PLAN VIEW

KEY WEST, MONROE COUNTY, FLORIDA

TETRA TECH INC.
759 SOUTH FEDERAL HWY
SUITE 314
STUART, FL 34994-2936
TEL: (772) 781-3400
FAX: (772) 781-3411

CERTIFICATE OF AUTHORIZATION NO. 2429

Designed by: --
Drawn By: D. POLSKI
Checked By: --
Reviewed By: --
Design file no: KW_PILES_2021.DWG
Scale: AS SHOWN

Sheet Reference:
G-005
Sheet 5 of 13

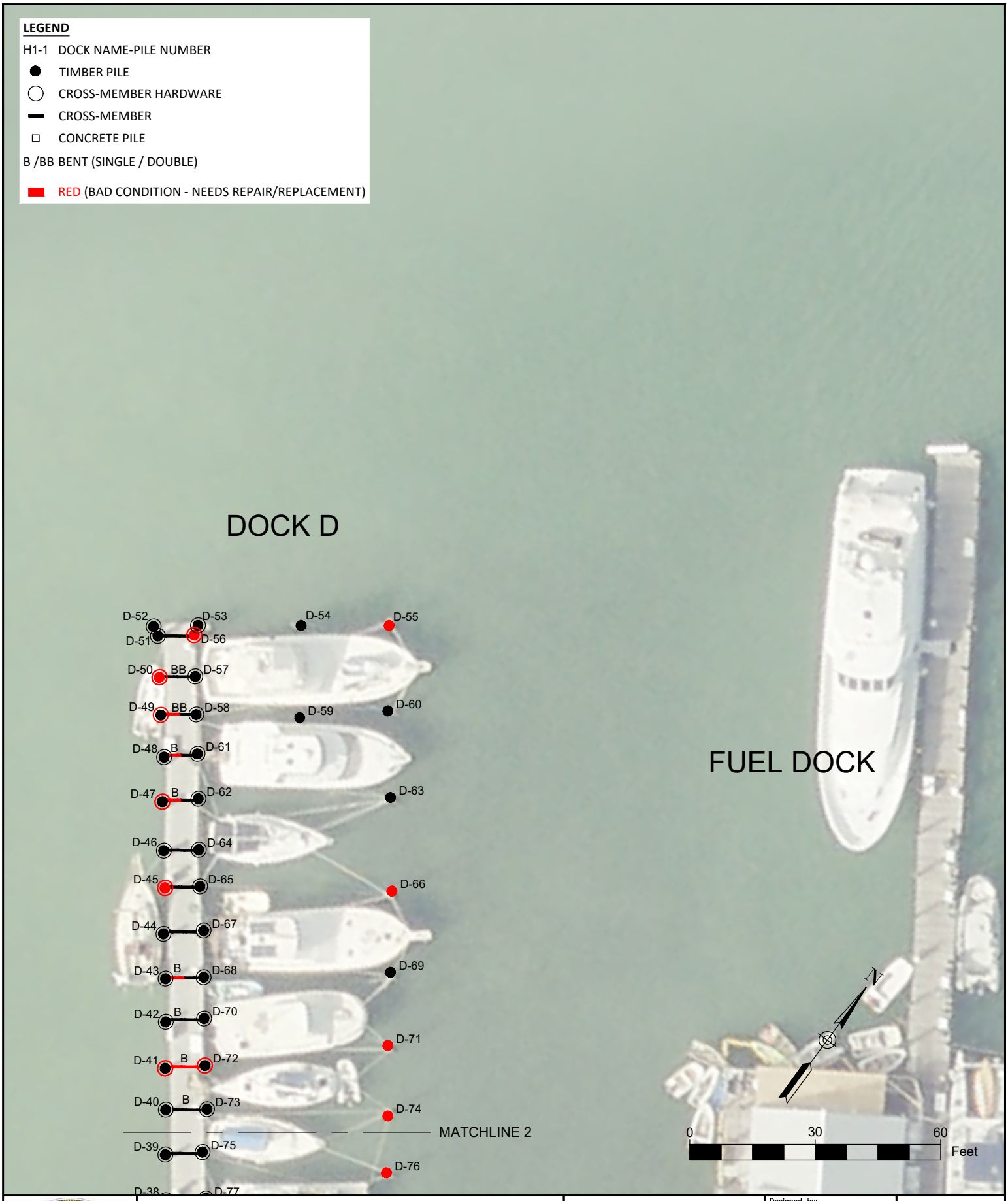

CITY OF KEY WEST
KEY WEST BIGHT MARINA PILE ASSESSMENT

DOCK D PLAN VIEW

KEY WEST, MONROE COUNTY, FLORIDA

TETRA TECH INC.
759 SOUTH FEDERAL HWY
SUITE 314
STUART, FL 34994-2936
TEL: (772) 781-3400
FAX: (772) 781-3411

CERTIFICATE OF AUTHORIZATION
NO. 2429

Designed by:	--
Drawn By:	D. POLSKI
Checked By:	--
Reviewed By:	--
Design file no:	KW_PILES_2021.DWG
Scale:	AS SHOWN

Sheet Reference:
G-006
Sheet 6 of 13

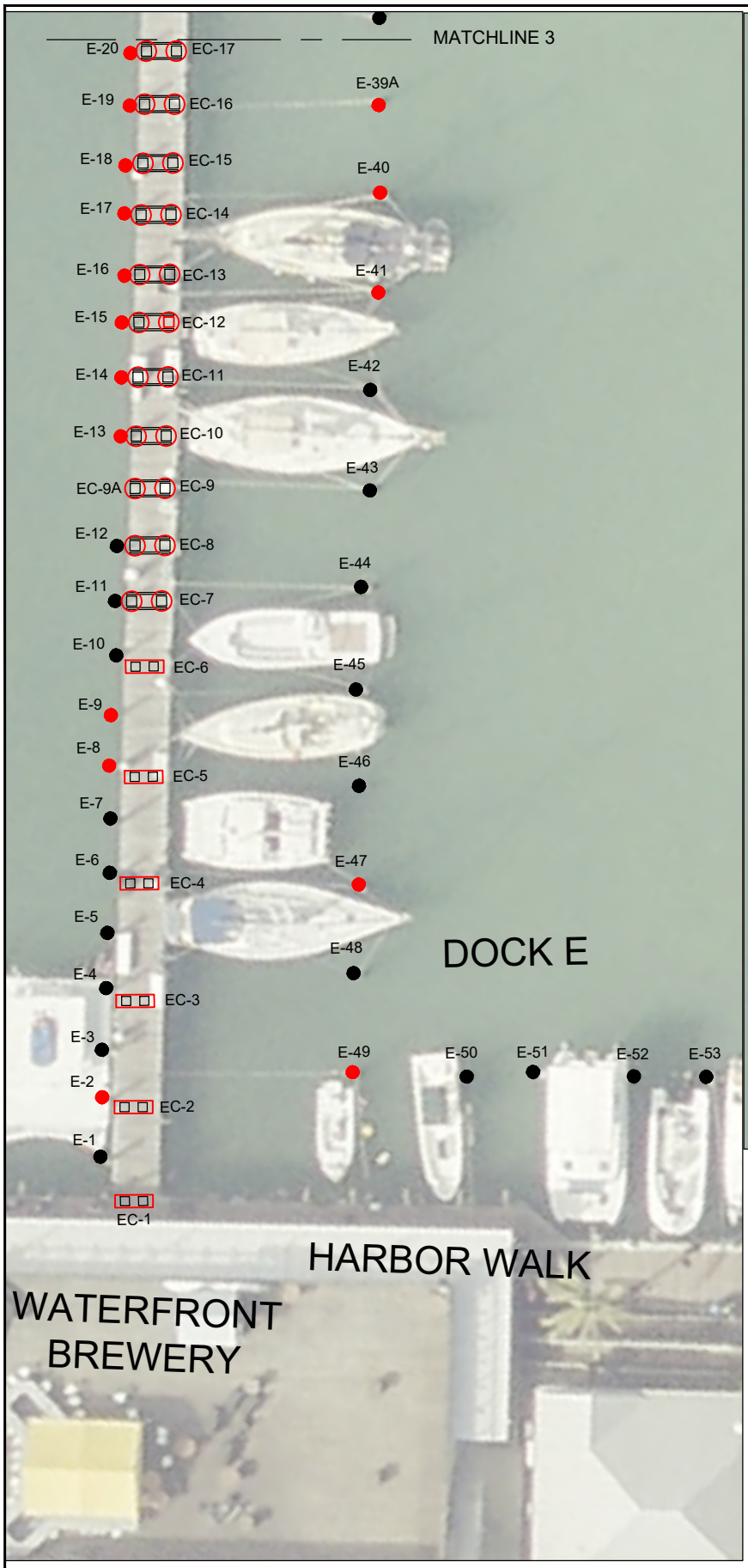

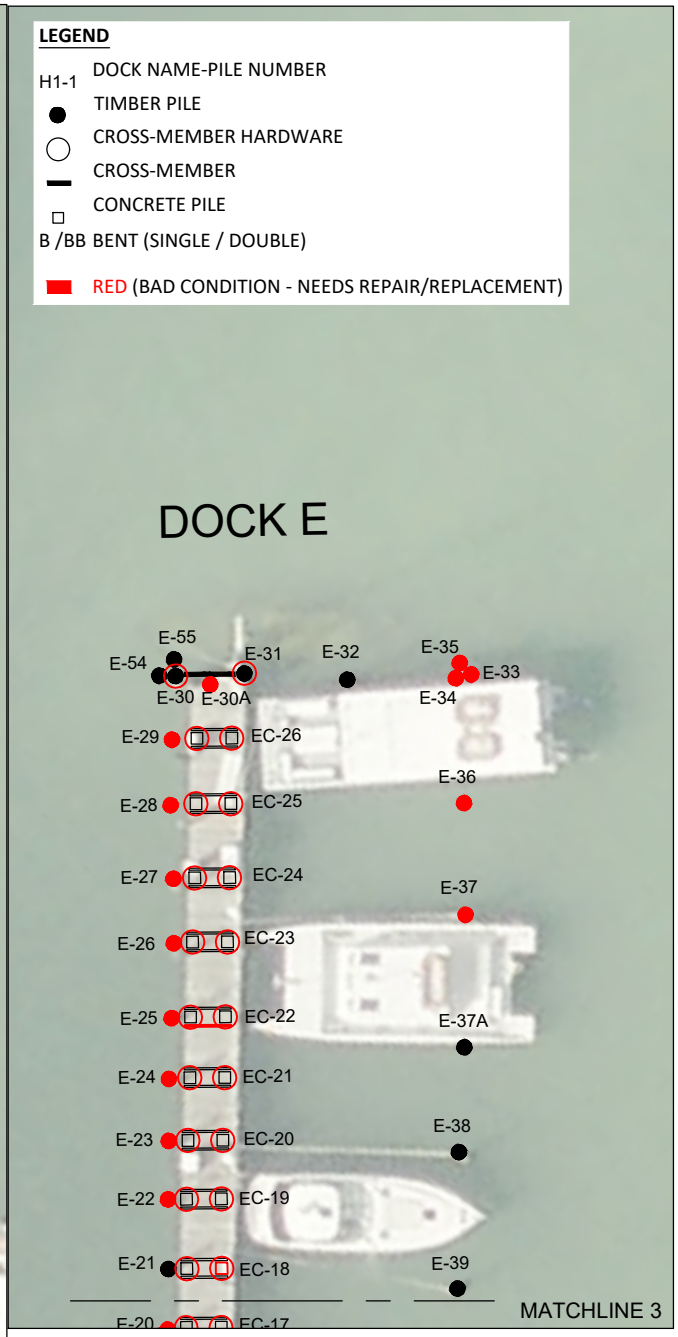

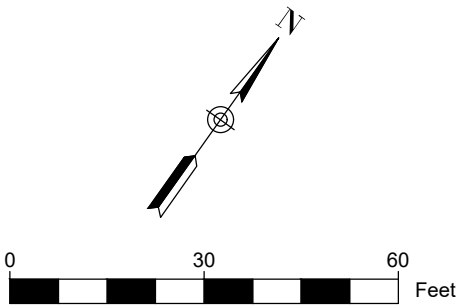

CITY OF KEY WEST
KEY WEST BIGHT MARINA PILE ASSESSMENT

DOCK E PLAN VIEW

KEY WEST, MONROE COUNTY, FLORIDA

TETRA TECH INC.
759 SOUTH FEDERAL HWY
SUITE 314
STUART, FL 34994-2936
TEL: (772) 781-3400
FAX: (772) 781-3411

CERTIFICATE OF AUTHORIZATION
NO. 2429

Designed by:	--
Drawn By:	D. POLSKI
Checked By:	--
Reviewed By:	--
Design file no:	KW_PILES_2021.DWG
Scale:	AS SHOWN

Sheet Reference:
G-007
Sheet 7 of 13

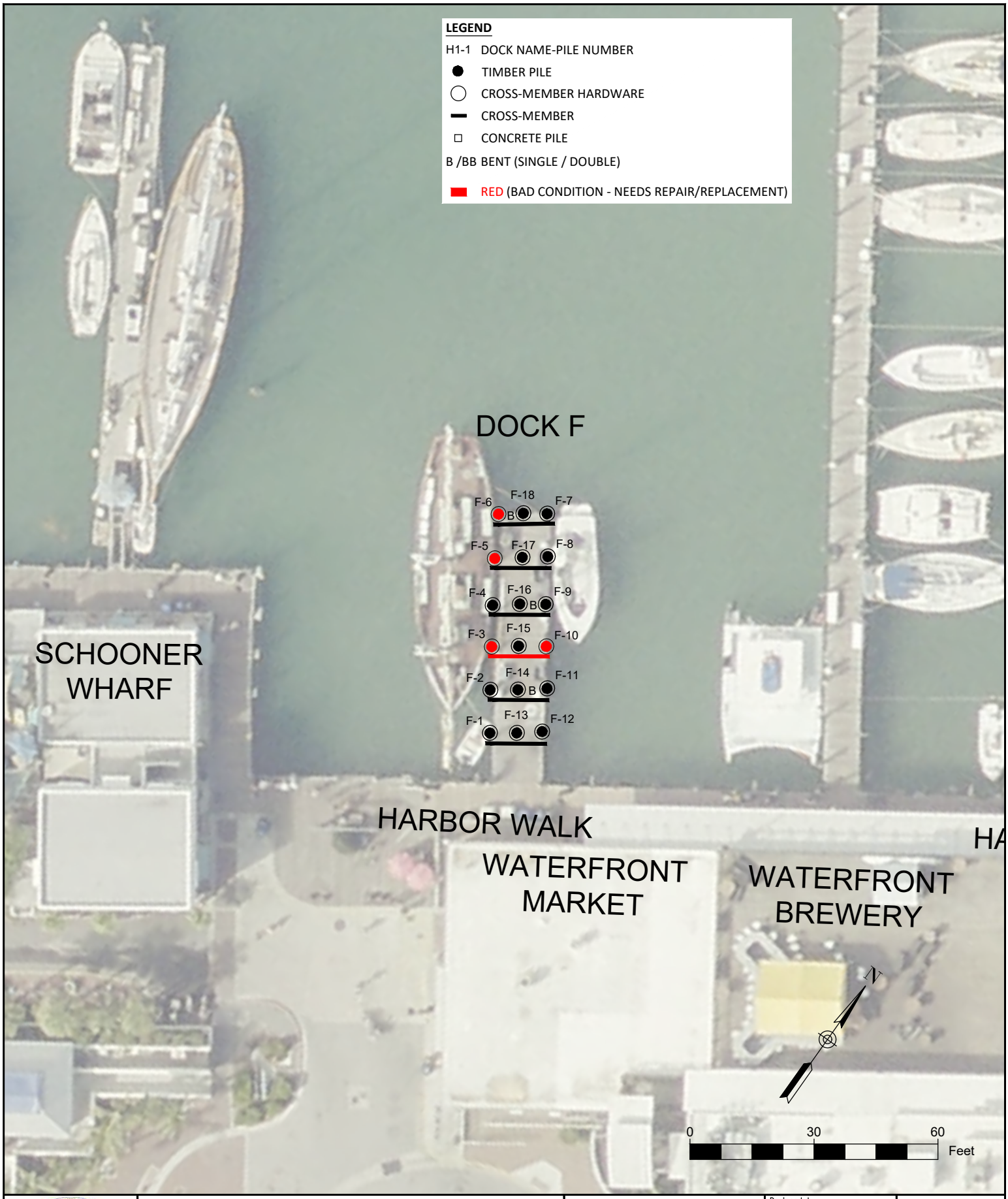

CITY OF KEY WEST
KEY WEST BIGHT MARINA PILE ASSESSMENT

DOCK F PLAN VIEW

KEY WEST, MONROE COUNTY, FLORIDA

TETRA TECH INC.
759 SOUTH FEDERAL HWY
SUITE 314
STUART, FL 34994-2936
TEL: (772) 781-3400
FAX: (772) 781-3411

CERTIFICATE OF AUTHORIZATION
NO. 2429

Designed by:	--
Drawn By:	D. POLSKI
Checked By:	--
Reviewed By:	--
Design file no:	KW_PILES_2021.DWG
Scale:	AS SHOWN

Sheet Reference:
G-008
Sheet 8 of 13

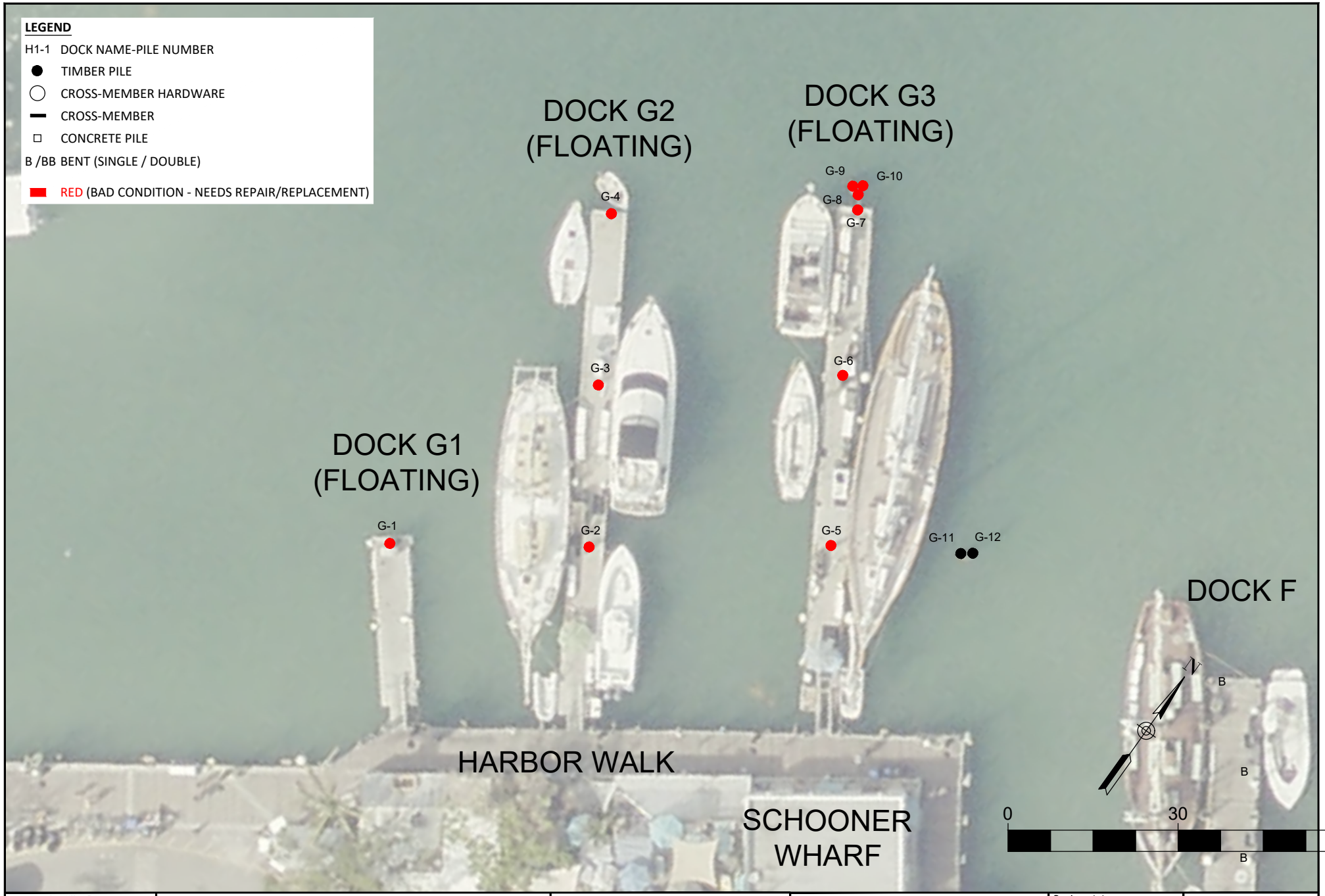

CITY OF KEY WEST
KEY WEST BIGHT MARINA PILE ASSESSMENT

DOCK G PLAN VIEW

KEY WEST, MONROE COUNTY, FLORIDA

TETRA TECH INC.
759 SOUTH FEDERAL HWY
SUITE 314
STUART, FL 34994-2936
TEL: (772) 781-3400
FAX: (772) 781-3411
CERTIFICATE OF AUTHORIZATION NO. 2429

ENGINEER NAME
Florida PE No. -----

Designed by:	--
Drawn By:	D. POLSKI
Checked By:	--
Reviewed By:	--
Design file no:	KW_PILES_2021.DWG
Scale:	AS SHOWN

Sheet Reference:
G-009
Sheet 9 of 13

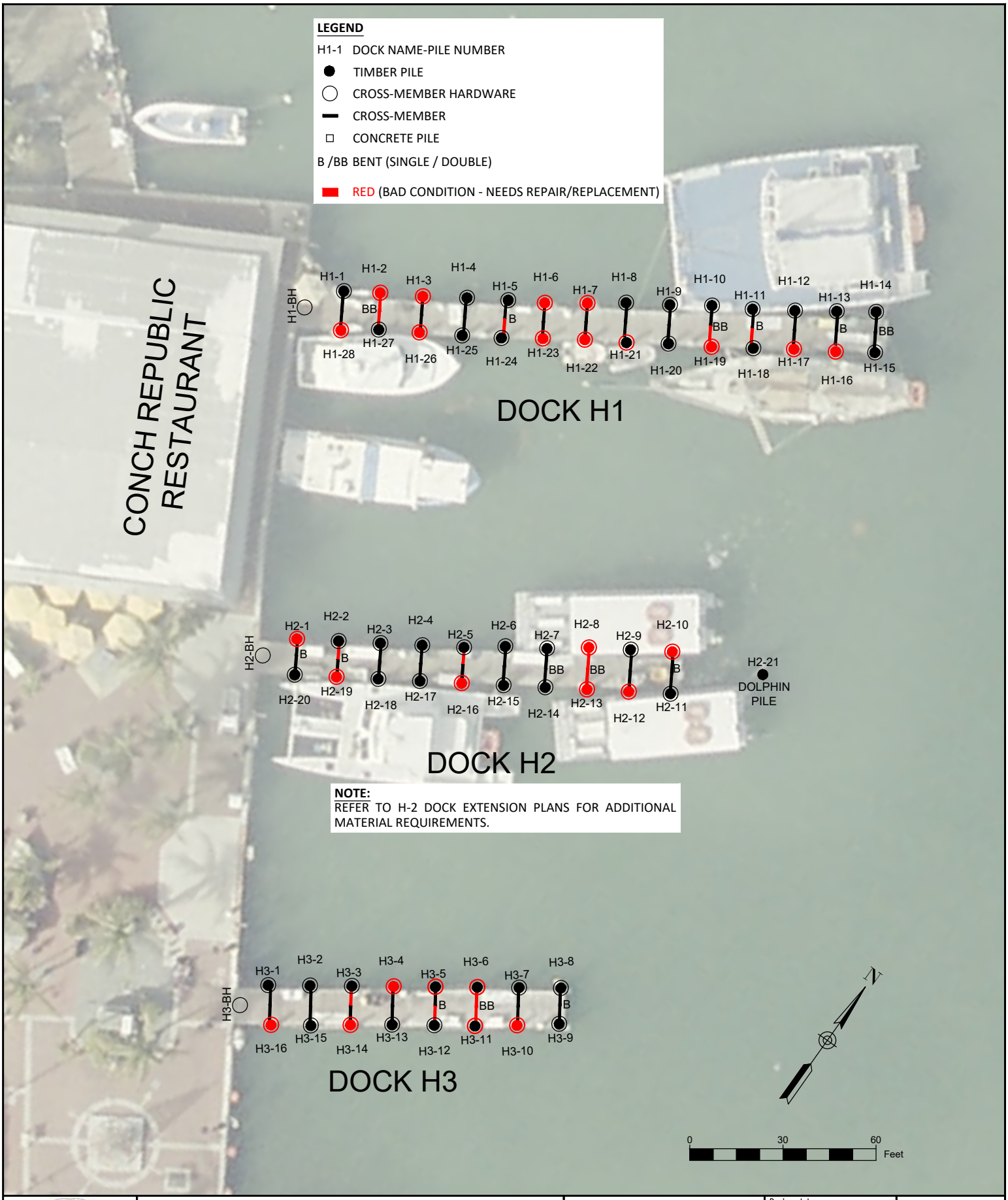

CITY OF KEY WEST
KEY WEST BIGHT MARINA PILE ASSESSMENT

DOCK H PLAN VIEW

KEY WEST, MONROE COUNTY, FLORIDA

TETRA TECH INC.
759 SOUTH FEDERAL HWY
SUITE 314
STUART, FL 34994-2936
TEL: (772) 781-3400
FAX: (772) 781-3411

CERTIFICATE OF AUTHORIZATION NO. 2429

Designed by:	--
Drawn By:	D. POLSKI
Checked By:	--
Reviewed By:	--
Design file no:	KW_PILES_2021.DWG
Scale:	AS SHOWN

Sheet Reference:
G-010
Sheet 10 of 13

Mark	Description	Date	Appr.
–	–	–	–

Designed by: – –
Drawn By: D. POLSKI
Checked By: –
Reviewed By: –
Design file no: KW_PILE_2021.DWG
Scale: AS SHOWN

TETRA TECH INC.
759 SOUTH FEDERAL HWY
SUITE 314
STUART, FL 34994–2936
TEL: (772) 781–3400
FAX: (772) 781–3411
CERTIFICATE OF AUTHORIZATION
NO. 2429

CITY OF KEY WEST
KEY WEST BIGHT MARINA PILE ASSESSMENT

DOCK H PLAN VIEW

KEY WEST, MONROE COUNT, FLORIDA

Sheet Reference:
G-001
Sheet 1 of 13

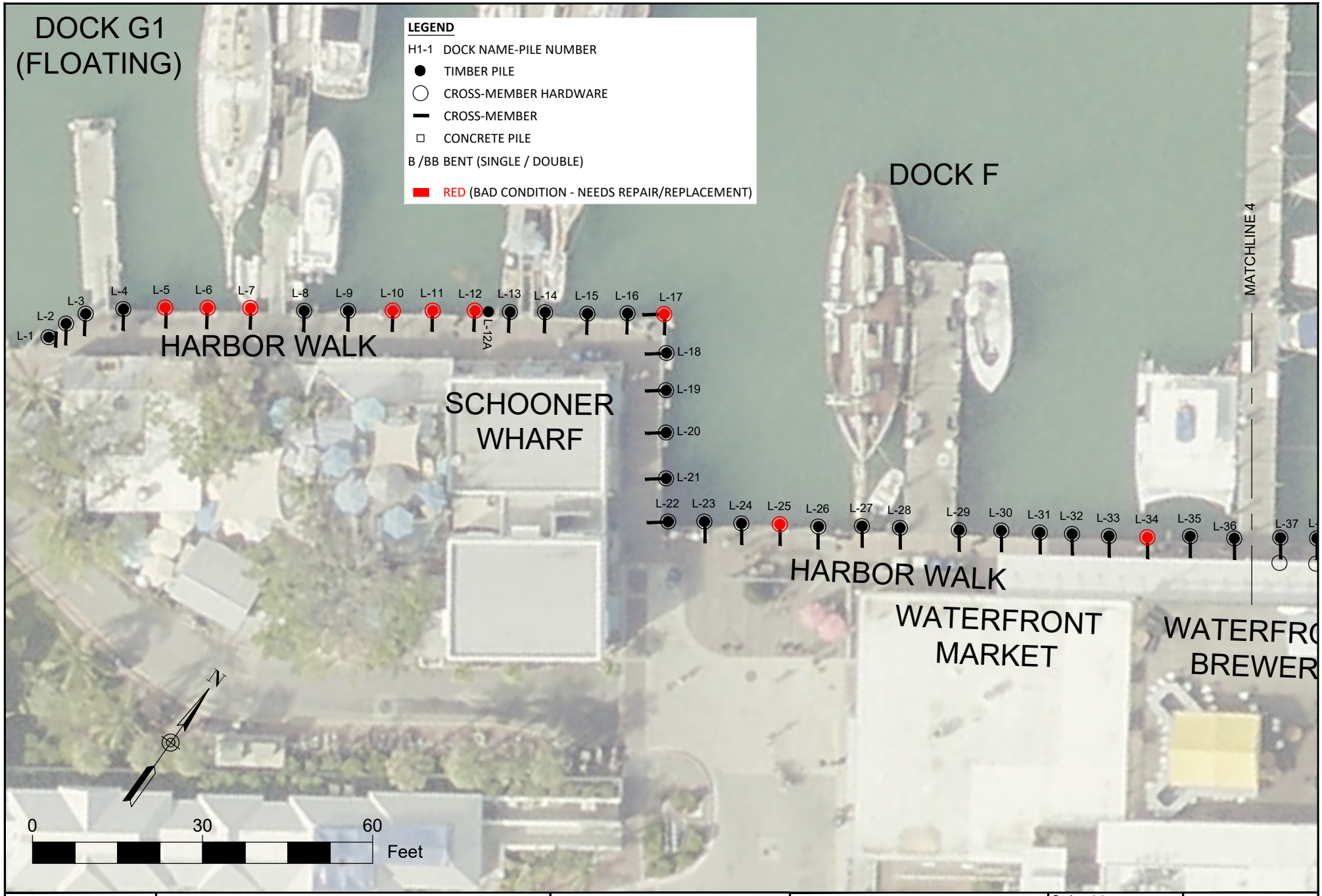

CITY OF KEY WEST
KEY WEST BIGHT MARINA PILE ASSESSMENT

HARBOR WALK PLAN VIEW

KEY WEST, MONROE COUNTY, FLORIDA

TETRA TECH INC.
759 SOUTH FEDERAL HWY
SUITE 314
STUART, FL 34994-2936
TEL: (772) 781-3400
FAX: (772) 781-3411
CERTIFICATE OF AUTHORIZATION
NO. 2429

ENGINEER NAME
Florida PE No. -----

Designed by: --
Drawn By: D. POLSKI
Checked By: --
Reviewed By: --
Design file no: KW_PILES_2021.DWG
Scale: AS SHOWN

Sheet Reference:
G-011
Sheet 11 of 13

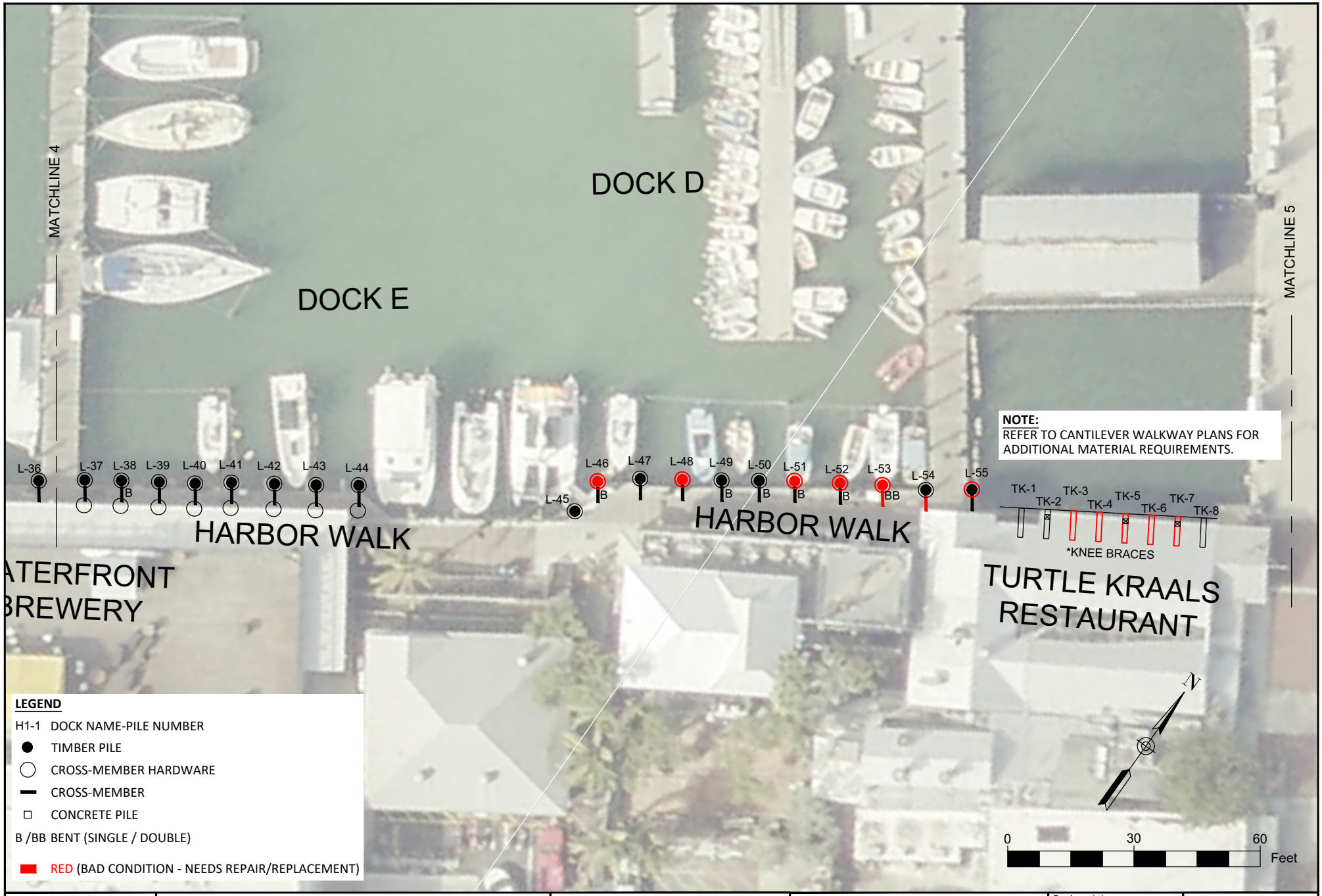

NOTE:
REFER TO CANTILEVER WALKWAY PLANS FOR ADDITIONAL MATERIAL REQUIREMENTS.

LEGEND

H1-1 DOCK NAME-PILE NUMBER
● TIMBER PILE
○ CROSS-MEMBER HARDWARE
▬ CROSS-MEMBER
□ CONCRETE PILE
B /BB BENT (SINGLE / DOUBLE)
RED (BAD CONDITION - NEEDS REPAIR/REPLACEMENT)

CITY OF KEY WEST
KEY WEST BIGHT MARINA PILE ASSESSMENT

HARBOR WALK PLAN VIEW

KEY WEST, MONROE COUNTY, FLORIDA

TETRA TECH INC.
759 SOUTH FEDERAL HWY
SUITE 314
STUART, FL 34994-2936
TEL: (772) 781-3400
FAX: (772) 781-3411
CERTIFICATE OF AUTHORIZATION NO. 2429

ENGINEER NAME
Florida PE No. -----

Designed by:	--
Drawn By:	D. POLSKI
Checked By:	--
Reviewed By:	--
Design file no:	KW_PILES_2021.DWG
Scale:	AS SHOWN

Sheet Reference:
G-012
Sheet 12 of 13

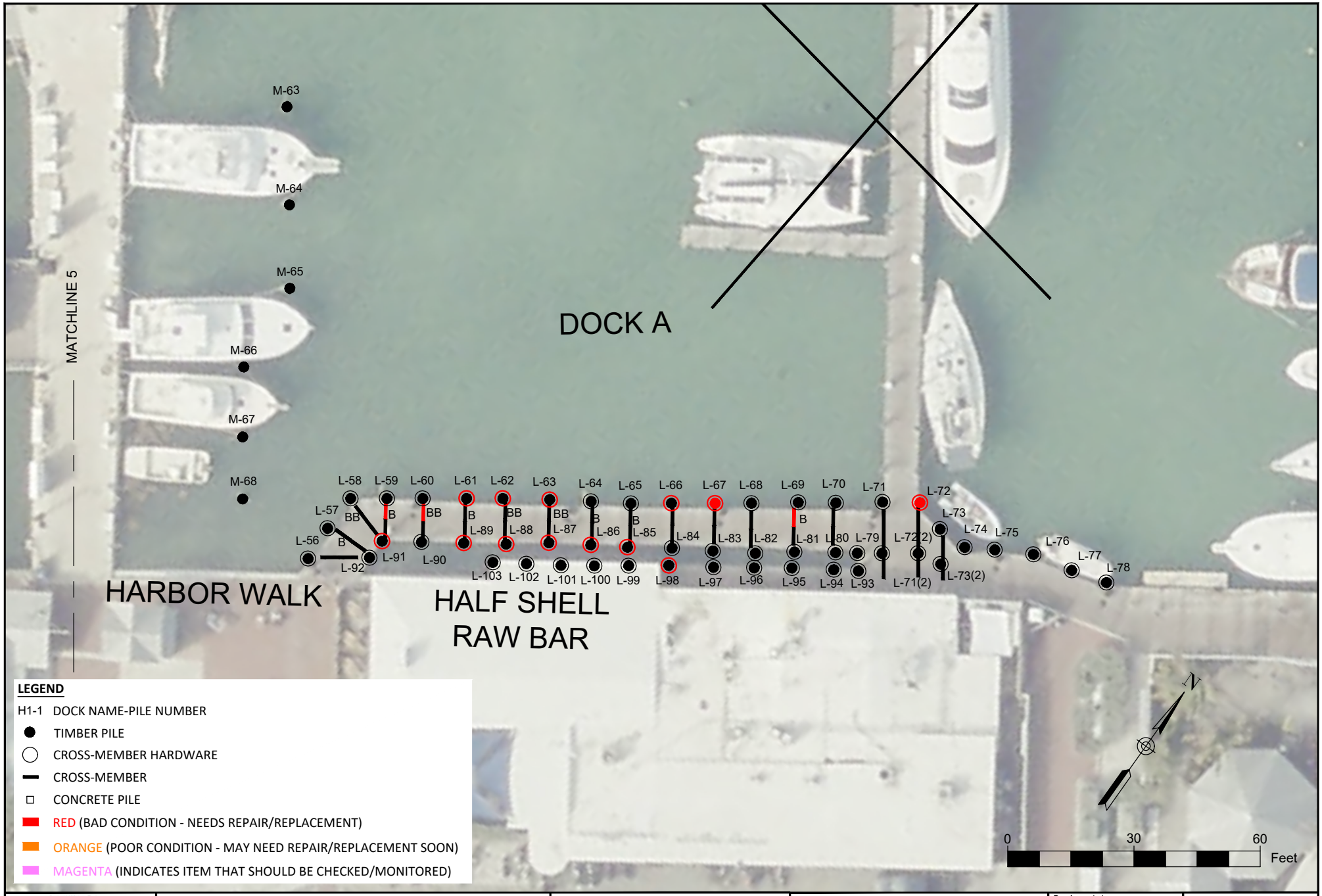

LEGEND

H1-1 DOCK NAME-PILE NUMBER

- TIMBER PILE
- CROSS-MEMBER HARDWARE
- CROSS-MEMBER
- CONCRETE PILE
- RED (BAD CONDITION - NEEDS REPAIR/REPLACEMENT)
- ORANGE (POOR CONDITION - MAY NEED REPAIR/REPLACEMENT SOON)
- MAGENTA (INDICATES ITEM THAT SHOULD BE CHECKED/MONITORED)

CITY OF KEY WEST
KEY WEST BIGHT MARINA PILE ASSESSMENT

HARBOR WALK PLAN VIEW

KEY WEST, MONROE COUNTY, FLORIDA

TETRA TECH INC.
759 SOUTH FEDERAL HWY
SUITE 314
STUART, FL 34994-2936
TEL: (772) 781-3400
FAX: (772) 781-3411
CERTIFICATE OF AUTHORIZATION NO. 2429

ENGINEER NAME
Florida PE No. -----

Designed by:	--
Drawn By:	D. POLSKI
Checked By:	--
Reviewed By:	--
Design file no:	KW_PILES_2021.DWG
Scale:	AS SHOWN

Sheet Reference:
G-013
Sheet 13 of 13

KEY WEST HISTORIC SEAPORT
H-2 DOCK EXTENSION
PERMIT / DESIGN DRAWINGS

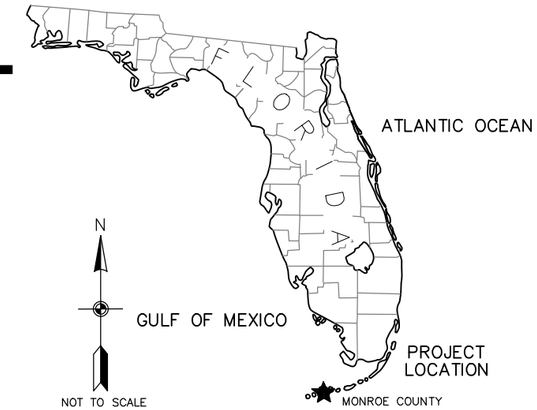

PROJECT LOCATION

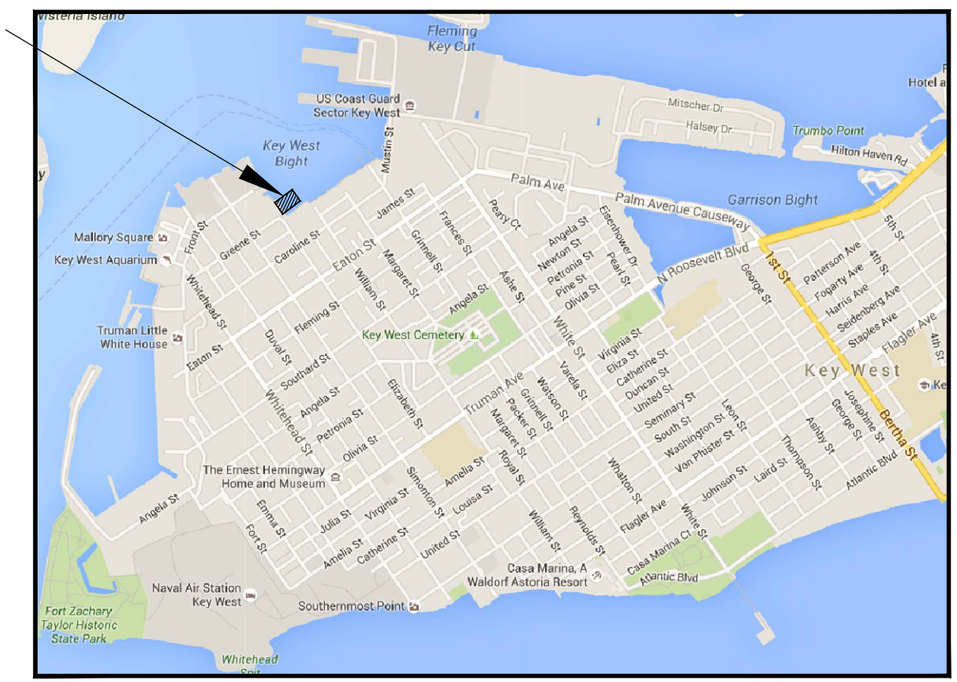

VICINITY MAP
KEY WEST BIGHT, KEY WEST, FLORIDA

KEY WEST CITY COMMISSION

TERI JOHNSON, MAYOR
CLAYTON LOPEZ, VICE-MAYOR
JIMMY WEEKLEY, COMMISSIONER
GREGORY DAVILA, COMMISSIONER
SAMUEL KAUFMAN, COMMISSIONER
MARY LOU HOOVER, COMMISSIONER
BILLY WARDLOW, COMMISSIONER

INDEX OF SHEETS

SHEET #	TITLE	LATEST UPDATE	REV.
G-001	COVER SHEET AND VICINITY MAP	3/29/2022	0
G-002	KEY WEST BIGHT LOCATION AND ACCESS	3/29/2022	0
G-003	GENERAL NOTES	3/29/2022	0
G-004	LOCATION PLAN	3/29/2022	0
C-101	EXISTING SITE PLAN	3/29/2022	0
C-102	PROPOSED SITE PLAN	3/29/2022	0
C-103	DOCK CROSS-SECTIONS	3/29/2022	0
C-104	STORMWATER POLLUTION PREVENTION PLAN (SWPPP) DETAILS	3/29/2022	0

PERMITS:

FDEP: 0137939-025 EI, EXPIRES JUNE 29, 2026
ERP, STATE OWNED SUBMERGED LANDS AUTHORIZATION

USACE: SAJ-2021-00839-(SP-GGM), EXPIRES AUGUST 25, 2026
DEPARTMENT OF THE ARMY PERMIT

FKNMS-NOAA: AUTHORIZED THROUGH DEPARTMENT OF THE ARMY PERMIT

PROJECT #: KB75032202 ITB #: ------

Sunshine 811 Know what's below. Call before you dig.

DAVID W. FRODSHAM, STATE OF FLORIDA, PROFESSIONAL ENGINEER, LICENSE NO. 75507

THIS ITEM HAS BEEN DIGITALLY SIGNED AND SEALED BY DAVID W. FRODSHAM, PE USING A DIGITAL SIGNATURE. ON THE DATE ADJACENT TO THE DIGITAL SIGNATURE.

PRINTED COPIES OF THIS DOCUMENT ARE NOT CONSIDERED SIGNED AND SEALED AND THE SHA AUTHENTICATION CODE MUST BE VERIFIED ON ANY ELECTRONIC COPIES.

Mark	Description	Date	Appr.
-	-	-	-

Designed by: DF
Drawn By: DP
Checked By: DF
Date: 3/29/2022
Design file no: KW HI-H2 DOCK EXTENSIONS-V4.DWG
Scale: AS SHOWN

TETRA TECH INC.
759 SOUTH FEDERAL HWY
SUITE 314
STUART, FL 34994-2936
TEL: (772) 781-3400
FAX: (772) 781-3411
CERTIFICATE OF AUTHORIZATION NO. 2429

KEY WEST HISTORIC SEAPORT
H-2 DOCK EXTENSIONS
COVER SHEET AND VICINITY MAP
KEY WEST, MONROE COUNTY, FLORIDA

Sheet Reference:
G-001
Sheet 1 of 8

P:\CITY OF KEY WEST\TASK 47: KEY WEST BIGHT H DOCK EXTENSIONS\CAD\KW HI-H2 DOCK EXTENSIONS-V4.DWG

DAVID W. FRODSHAM, STATE OF FLORIDA,
PROFESSIONAL ENGINEER, LICENSE NO. 75507

THIS ITEM HAS BEEN DIGITALLY SIGNED AND SEALED BY DAVID W. FRODSHAM, PE USING A DIGITAL SIGNATURE. ON THE DATE ADJACENT TO THE DIGITAL SIGNATURE.

PRINTED COPIES OF THIS DOCUMENT ARE NOT CONSIDERED SIGNED AND SEALED AND THE ***SHA*** AUTHENTICATION CODE MUST BE VERIFIED ON ANY ELECTRONIC COPIES.

Mark	Description	Date	Appr.
–	–	–	–

Designed by: DF
Drawn By: DP
Checked By: DF
Date: 2/28/2022
Design File No: KWHS H2 DOCK EXTENSIONS-V4.DWG
Scale: AS SHOWN

TETRA TECH INC.
759 SOUTH FEDERAL HWY
SUITE 314
STUART, FL 34994-2936
TEL: (772) 781-3400
FAX: (772) 781-3411
CERTIFICATE OF AUTHORIZATION NO. 2429

KEY WEST HISTORIC SEAPORT
H-2 DOCK EXTENSIONS

KEY WEST BIGHT LOCATION AND ACCESS

KEY WEST, MONROE COUNTY, FLORIDA

Sheet Reference:
G-002
Sheet 2 of 8

P:\CITY OF KEY WEST\TASK 47, KEY WEST BIGHT H DOCK EXTENSIONS\CAD\KWB H1-H2 DOCK EXTENSIONS-V4.DWG

GENERAL NOTES:

1. THIS DOCUMENT IDENTIFIES THE OWNER AS THE "CAROLINE STREET CORRIDOR AND BAHAMA VILLAGE COMMUNITY REDEVELOPMENT AGENCY," HEREINAFTER REFERRED TO AS "CRA."
2. THE CONTRACTOR SHALL FIELD VERIFY EXISTING CONDITIONS PRIOR TO PERFORMING ANY WORK UNDER THIS CONTRACT AND NOTIFY THE "CRA"/ENGINEER IN WRITING OF ANY DIFFERENCES BEFORE COMMENCING WITH CONSTRUCTION.
3. IT SHALL BE THE RESPONSIBILITY OF THE CONTRACTOR TO FAMILIARIZE HIMSELF/HERSELF WITH THE SITE, ACCESS CONSTRAINTS, LOCAL BOATING SCHEDULES, AND OTHER UNIQUE CONSIDERATIONS AS IDENTIFIED IN THE CONTRACT DOCUMENTS.
4. THE CONTRACTOR SHALL REVIEW THE CONTRACT DOCUMENTS AND, IN CASE OF ANY CONFLICT BETWEEN ANY PORTION OF THE CONTRACT DOCUMENTS, THE CONTRACTOR SHALL REQUEST CLARIFICATION IN WRITING PRIOR TO BIDDING OR BASE HIS/HER BID ON THE MORE STRINGENT REQUIREMENTS.
5. THE CONTRACTOR SHALL SUBMIT SHOP DRAWINGS OF ALL MATERIALS USED TO THE "CRA"/ENGINEER FOR APPROVAL PRIOR TO ORDER, SHIPMENT, OR INSTALLATION.
6. IT SHALL BE THE RESPONSIBILITY OF THE CONTRACTOR TO ENSURE THAT ALL REQUIRED LOCAL PERMITS ARE OBTAINED AND IN HAND BEFORE BEGINNING ANY CONSTRUCTION. NO CONSTRUCTION OR FABRICATION OF ANY ITEM SHALL BEGIN UNTIL THE CONTRACTOR HAS RECEIVED ALL PERMITS AND ANY OTHER DOCUMENTATION FROM ALL OF THE PERMITTING AND ANY OTHER REGULATORY AUTHORITIES. ANY PENALTIES, STOP WORK ORDERS OR ADDITIONAL WORK RESULTING FROM THE CONTRACTOR BEING IN VIOLATION OF THE REQUIREMENTS ABOVE SHALL BE FULLY BORNE BY THE CONTRACTOR. THE CONTRACTOR SHALL COMPLY WITH ALL CONDITIONS OF THE PERMITS, INCLUDING ALL APPLICABLE STANDARD CONDITIONS FOR IN-WATER WORK.
7. THE CONTRACTOR SHALL MAINTAIN A CURRENT SET OF CONSTRUCTION PLANS AND PERMITS ON THE JOB DURING ALL PHASES OF CONSTRUCTION.
8. ALL FIELD LAYOUT, SURVEYING, AND MATERIALS TESTING FOR CONSTRUCTION OF THE PROJECT SHALL BE PROVIDED BY THE CONTRACTOR AT HIS/HER EXPENSE.
9. AFTER CONSTRUCTION IS COMPLETE, THE CONTRACTOR SHALL PROVIDE:
   TWO (2) SETS OF SIGNED & SEALED 'AS-BUILT' RECORD DRAWINGS TO THE CRA; AND
   TWO (2) SETS OF SIGNED & SEALED 'AS-BUILT' RECORD DRAWINGS TO THE ENGINEER-OF-RECORD;
   OF HIS/HER WORK FOR FINAL REVIEW AND ACCEPTANCE.
10. CONTRACTOR SHALL PROVIDE THE NAME AND PHONE NUMBER OF A RESPONSIBLE PERSON WHO WILL BE SUBJECT TO EMERGENCY CALLS 24 HOURS PER DAY, 7 DAYS PER WEEK.
11. THE CONTRACTOR SHALL NOT BRING ANY HAZARDOUS MATERIALS ON TO THE PROJECT. SHOULD CONTRACTOR REQUIRE SUCH FOR PERFORMING THE CONTRACTED WORK, THE CONTRACTOR SHALL REQUEST, IN WRITING, WRITTEN PERMISSION FROM THE PROJECT ENGINEER. THE CONTRACTOR SHALL PROVIDE THE PROJECT ENGINEER WITH A COPY OF THE MATERIAL SAFETY DATA SHEET (MSDS) FOR EACH HAZARDOUS MATERIAL PROPOSED FOR USE, AND PROVIDE A DESCRIPTION OF THE SPECIFIC MANNER IN WHICH THE MATERIAL WILL BE USED. THE PROJECT ENGINEER SHALL COORDINATE WITH THE OWNER PRIOR TO ISSUING WRITTEN APPROVAL TO THE CONTRACTOR. BECAUSE STATE LAW DOES NOT TREAT PETROLEUM PRODUCTS THAT ARE PROPERLY CONTAINERIZED AS HAZARDOUS MATERIALS, SUCH PRODUCTS DO NOT REQUIRE AN MSDS SUBMITTAL. ALL BULK PETROLEUM PRODUCTS STORED ON SITE SHALL REQUIRE PROPER STORAGE WHICH INCLUDES SECONDARY CONTAINMENT.
12. CONTRACTOR IS RESPONSIBLE FOR VISITING SITE PRIOR TO CONSTRUCTION TO VERIFY PATH OF ACCESS FOR EQUIPMENT TO BASIN. AFTER CONSTRUCTION, CONTRACTOR IS TO RESTORE ANY DISTURBED LANDSCAPING, VEGETATION, OR OTHER SITE FEATURES TO EXISTING CONDITIONS OR BETTER.
13. THE CONTRACTOR SHALL COORDINATE SELECTION AND REVIEW OF ANY PROPOSED STAGING AREAS WITH THE PROJECT ENGINEER AND OWNER/REPRESENTATIVE. STAGING AREAS AND STOCKPILES FOR MATERIAL AND EQUIPMENT SHALL NOT BE PLACED IN PROXIMITY TO SURFACE WATERS.
14. IF SUSPECT CONTAMINATED OR HAZARDOUS MATERIAL IS FOUND ON THE PROJECT, OR ENCOUNTERED DURING CONSTRUCTION, CONTRACTOR SHALL IMMEDIATELY NOTIFY THE PROJECT ENGINEER.
15. ALL WORK TO BE PERFORMED UNDER THIS CONTRACT SHALL COMPLY WITH THE FLORIDA BUILDING CODE (LATEST EDITION), CITY LABOR LAWS, CITY ORDINANCES, CITY/COUNTY ZONING CODES, RULES AND REGULATIONS, AND ANY APPLICABLE CODES. THE CONTRACTOR SHALL BE RESPONSIBLE FOR OBTAINING ALL REQUIRED PERMITS TO CARRY OUT THE WORK DESCRIBED IN THE CONSTRUCTION DOCUMENTS.
16. THE CONTRACTOR GUARANTEES AND WARRANTS THAT ALL WORK PERFORMED SHALL BE FREE FROM DEFECTS IN MATERIALS AND WORKMANSHIP AS INDICATED ON THE CONTRACT'S GENERAL CONDITIONS. ANY DEFECTS OR DAMAGE DISCOVERED DURING SAID PERIOD SHALL BE REPAIRED OR REPLACED BY THE CONTRACTOR AS DIRECTED IN WRITING BY THE ENGINEER WITH NO COST TO THE OWNER OR ENGINEER.
17. NO WORK SHALL BE PERFORMED OUTSIDE PROJECT LIMITS WITHOUT PRIOR WRITTEN APPROVAL FROM THE PROPERTY OWNER OR ENGINEER.
18. THE CONTRACTOR SHALL BE RESPONSIBLE FOR COORDINATING THE WORK OF ALL TRADES AS REQUIRED FOR COMPLETION OF WORK.
19. UPON COMPLETION OF PROJECT, CONTRACTOR SHALL PROVIDE TWO (2) SETS OF AS-BUILT DRAWINGS TO THE ENGINEER FOR FINAL REVIEW AND ACCEPTANCE.
20. MATERIALS SHALL BE NEW, OF QUALITY SPECIFIED, AND DELIVERED IN A TIMELY FASHION AND OF AMPLE QUANTITY TO PREVENT DELAY OF WORK.
21. IT IS THE CONTRACTOR'S RESPONSIBILITY TO SECURE THE PREMISES THROUGHOUT THE DURATION OF THE PROJECT. THE CONTRACTOR SHALL TAKE THE APPROPRIATE AND NECESSARY MEASURES TO PREVENT THE GENERAL PUBLIC FROM ACCESSING THE SITE AT ANY TIME.
22. THERE ARE NO SUBSTITUTIONS ALLOWED UNLESS APPROVED BY THE ENGINEER. THE CONTRACTOR SHALL SUBMIT IN WRITING ALL REQUESTS FOR SUBSTITUTIONS.
23. THE CONTRACTOR SHALL SUBMIT SHOP DRAWINGS, PRODUCT DATA, AND SAMPLES TO ENGINEER FOR APPROVAL PRIOR TO FABRICATION OR PROCUREMENT. SUBCONTRACTORS SHALL VISIT THE PROJECT SITE TO VERIFY CONDITIONS, DIMENSIONS, ETC. THE CONTRACTOR SHALL ALLOW A MAXIMUM OF 14 DAYS TURN AROUND TIME FOR THE ENGINEER TO PROCESS SHOP DRAWINGS AND SUBMITTALS.
24. THE CONTRACTOR SHALL INSTALL ALL MATERIALS ACCORDING TO MANUFACTURER'S RECOMMENDED SPECIFICATIONS. THE CONTRACTOR SHALL SUBMIT IN WRITING TO THE ENGINEER, PRIOR TO INSTALLATION, IF THERE EXISTS ANY UNFORESEEN CONDITION AFFECTING INSTALLATION ACCORDING TO SPECIFICATIONS.
25. ALL PLAN DETAILS ARE ASSUMED TO BE TYPICAL CONDITIONS UNLESS DETAILED OR NOTED OTHERWISE.
26. CONTRACTOR SHALL BE RESPONSIBLE FOR UPDATING HIS CONSTRUCTION DOCUMENTS WITH THE REVISED DRAWINGS AND SPECIFICATIONS, FIELD ORDERS, CHANGE ORDERS, AND CLARIFICATION SKETCHES ISSUED DURING THE COURSE OF CONSTRUCTION.
27. CONTRACTOR SHALL PROVIDE ALL SUPPLEMENTAL MATERIALS REQUIRED TO PROPERLY INSTALL, SUPPORT, AND BRACE ALL ITEMS AND COMPONENTS WITHIN THE WORK.

SURVEY:

28. ELEVATIONS SHOWN HEREON ARE IN FEET AND BASED ON THE NATIONAL GEODETIC VERTICAL DATUM OF 1929 (NGVD 1929). TO CONVERT NGVD 1929 ELEVATIONS TO NORTH AMERICAN VERTICAL DATUM OF 1988 (NAVD 1988) FOR THIS SITE, THE MODEL VALUE OF (-)1.34 MUST BE ADDED ALGEBRAICALLY TO THE NGVD 1929 HEIGHT.
29. THE GRID COORDINATES SHOWN HEREON ARE BASED ON THE NORTH AMERICAN DATUM OF 1927, OF THE FLORIDA STATE PLANE COORDINATE SYSTEM (TRANSVERSE MERCATOR PROJECTION), EAST ZONE, ESTABLISHED BY A REAL-TIME KINEMATIC SURVEY (RTK) GPS CONTROL SURVEY WHICH IS CERTIFIED TO A 2 CENTIMETER LOCAL ACCURACY, RELATIVE TO THE NEAREST CONTROL POINT WITHIN THE NATIONAL GEODETIC SURVEY (NGS) GEODETIC CONTROL NETWORK.

a. METHOD: WIDE AREA CONTINUOUSLY OPERATION GPS REFERENCE STATION NETWORK.
b. EQUIPMENT USED: TRIMBLE R10 GNSS, SERIAL NUMBER 5413460373 (DUAL FREQUENCY RECEIVER)
c. PROCESSING SOFTWARE: TRIMBLE BUSINESS CENTER, VERSION 3.51

30. BENCHMARK DESCRIPTION: NATIONAL GEODETIC SURVEY STATION DESIGNATION "872 4580 TIDAL 25" (PID AA0004), ELEVATION=5.11 (NGVD 1929), ELEVATION=3.77 (NAVD 1988).

UTILITIES:

31. CONTRACTOR SHALL LOCATE ALL EXISTING UTILITIES, WHETHER SHOWN ON THE PLANS OR NOT, AND TO PROTECT THEM FROM DAMAGE. THE CONTRACTOR SHALL BEAR ALL EXPENSE FOR REPAIR OR REPLACEMENT OF UTILITIES AND OTHER PROPERTY DAMAGED BY OPERATIONS IN CONJUNCTION WITH THE COMPLETION OF THIS WORK. THE CONTRACTOR SHALL LOCATE ALL UTILITIES IN THE AREA OF WORK PRIOR TO CONSTRUCTION. THE APPROPRIATE UTILITY COMPANY SHALL BE NOTIFIED BY THE CONTRACTOR AT LEAST 48 HOURS IN ADVANCE OF CONSTRUCTION ACTIVITIES SO THAT A UTILITY COMPANY REPRESENTATIVE CAN BE PRESENT.
32. THE CONTRACTOR SHALL NOTIFY ALL APPROPRIATE UTILITY COMPANIES A MINIMUM OF 2 BUSINESS DAYS IN ADVANCE OF ANY EXCAVATION INVOLVING ITS UTILITIES IN ORDER THAT A COMPANY REPRESENTATIVE CAN BE PRESENT.

THE CONTRACTOR SHALL VERIFY IF OTHER UTILITIES NOT SHOWN IN PLANS EXIST WITHIN THE AREA OF CONSTRUCTION. SHOULD UTILITY CONFLICTS ARISE, THE CONTRACTOR SHALL INFORM THE ENGINEER, THE OWNER, AND THE UTILITY COMPANY OF THE CONFLICT.

CONTACT PERSON/UTILITY OWNER:

LEONARD MAXWELL-NEWBOLD	COMCAST CABLE	954-447-8405
ASHLEE TOWNSEND	KEYS ENERGY SERVICES	305-295-1047
MARNIE WALTERSON	FKAA	305-295-2154
KELLY KOENIG	OMII	305-292-5100
DINO FARRUGGIO	AT&T	561-997-0240
KAREN OLSON	KEY WEST BIGHT	305-809-3803

33. TO THE EXTENT POSSIBLE, THE CONTRACTOR SHALL MAINTAIN UTILITY SERVICE TO ALL DOCKS WITHIN THE KEY WEST BIGHT DURING CONSTRUCTION.
34. UPLAND UNDERGROUND UTILITIES PRESENT ON THESE PLANS HAVE BEEN PROVIDED FROM PREVIOUS RECORD OR DESIGN DRAWINGS AND ARE NOT ENTIRELY REPRESENTATIVE OF ALL UNDERGROUND UTILITY LOCATIONS WITHIN THE PROJECT LIMITS NOR EXACT LOCATIONS AND SHALL BE CONSIDERED APPROXIMATE ONLY. UTILITIES SHALL REMAIN UNLESS OTHERWISE NOTED. NOT ALL UTILITIES WITHIN THE VICINITY OF THE PROJECT ARE DEPICTED. AERIAL UTILITIES EXIST IN VICINITY OF PROJECT SITE.

NPDES

35. CONTRACTOR SHALL BE NPDES COMPLIANT PRIOR TO AND DURING CONSTRUCTION ACTIVITIES.
36. EROSION CONTROL ITEMS SHALL BE UTILIZED FOR PREVENTION, CONTROL, AND ABATEMENT OF EROSION, SEDIMENTATION, AND WATER POLLUTION. THESE ITEMS ARE TO BE USED AT THE LOCATIONS DESCRIBED IN THE CONTRACTOR'S APPROVED EROSION CONTROL PLAN OR AS DIRECTED BY THE PROJECT ENGINEER TO COMPLY WITH ALL FEDERAL, STATE AND LOCAL REGULATIONS. ALL BMPS INCLUDING TURBIDITY BARRIER AND SILT FENCE SHALL BE REMOVED AT THE COMPLETION OF THE PROJECT.
37. BEST MANAGEMENT PRACTICES FOR EROSION AND TURBIDITY CONTROL SHALL BE UTILIZED AT ALL TIMES, PER ENVIRONMENTAL PERMITS, DURING CONSTRUCTION. THIS SHALL INCLUDE, BUT NOT BE LIMITED TO, THE USE OF STAKED HAY/STRAW BALES, STAKED FILTER CLOTH, STAKED SILT FENCE, AND ANY OTHER SUITABLE METHOD AROUND DRAINAGE STRUCTURES AND AT ALL AREAS SUBJECT TO EROSION. FLOATING OR STAKED TURBIDITY BARRIERS SHALL BE USED IF APPROPRIATE. THE CONTRACTOR SHALL PROVIDE DAILY INSPECTION OF THE EROSION PROTECTION ITEMS AND MAINTAIN THEM DURING THE ENTIRE PERIOD OF CONSTRUCTION.
38. ALL SURFACE WATER DISCHARGES FROM THE SITE SHALL MEET STATE WATER QUALITY STANDARDS (LESS THAN 29 NTU ABOVE BACKGROUND) PRIOR TO REACHING ANY WATERS OF THE STATE.

PILINGS

39. CONTRACTOR SHALL BID 45' LONG PRESSURE TREATED SOUTHERN YELLOW PINE TIMBER PILES. NO GREENHEART PILES SHALL BE PERMITTED.
40. PILINGS SHALL BE DRIVEN 5' MINIMUM INTO LIMESTONE (APPROXIMATE TIP ELEVATION (-) 35.0 NGVD OR REFUSAL).
41. ALL PILES TO BE 2.5 CCA OR 2.5 ACQ TREATED TIMBER.

WOOD/TIMBER

42. TIMBER NOTES
    - 42.1. P.T. S.Y.P. 2X4 - Fb = 1500 PSI, MIN.
    - 42.2. P.T. S.Y.P. 2X6 - Fb = 1250 PSI, MIN.
    - 42.3. P.T. S.Y.P. 2X8 - Fb = 1000 PSI, MIN.
    - 42.4. P.T. S.Y.P. 2X10 - Fb = 975 PSI, MIN.
43. ALL FRAMING MEMBERS TO BE 0.60 ACQ OR 0.60 CCA TREATED TIMBER.
44. ALL FRAMING MEMBERS TO BE S.Y.P. GRADE 1 OR BETTER.

HARDWARE

45. ALL HARDWARE SHALL BE STAINLESS STEEL.
46. ALL STAINLESS NUTS AND BOLTS SHALL BE SECURED WITH LOCTITE.

ADA

47. PROPOSED PORTION OF EACH DOCK SHALL MATCH EXISTING ELEVATION OF EXISTING DOCK.
48. MAXIMUM SLOPE IN ANY DIRECTIONS SHALL NOT EXCEED 2%.

DEBRIS REMOVAL

49. CONTRACTOR SHALL BE RESPONSIBLE FOR ALL DEBRIS REMOVAL FROM THE PROJECT SITE.

COORDINATION WITH CRA

50. CONTRACTOR SHALL BE RESPONSIBLE FOR COORDINATING SCHEDULE, DELIVERIES, STAGING AND OTHER MATTERS WITH THE CRA.

Sunshine811 Know what's below. Call before you dig.

SEAL OF THE CITY OF KEY WEST, FLORIDA

DAVID W. FRODSHAM, STATE OF FLORIDA, PROFESSIONAL ENGINEER, LICENSE NO. 75507
THIS ITEM HAS BEEN DIGITALLY SIGNED AND SEALED BY DAVID W. FRODSHAM, PE USING A DIGITAL SIGNATURE. ON THE DATE ADJACENT TO THE DIGITAL SIGNATURE.
PRINTED COPIES OF THIS DOCUMENT ARE NOT CONSIDERED SIGNED AND SEALED AND THE SHA AUTHENTICATION CODE MUST BE VERIFIED ON ANY ELECTRONIC COPIES.

Mark	Description	Date	Appr.
–	–	–	–

Designed by: DF
Drawn By: DP
Checked By: DF
Date: 2/28/2022
Design file no: KW H-2 DOCK EXTENSIONS-V4.DWG
Scale: AS SHOWN

TETRA TECH INC.
759 SOUTH FEDERAL HWY
SUITE 314
STUART, FL 34994-2936
TEL: (772) 781-3400
FAX: (772) 781-3411
CERTIFICATE OF AUTHORIZATION NO. 2429

KEY WEST HISTORIC SEAPORT
H-2 DOCK EXTENSIONS

GENERAL NOTES

KEY WEST, MONROE COUNTY, FLORIDA

Sheet Reference:
G-003
Sheet 3 of 8

P:\CITY OF KEY WEST\TASK #7, KEY WEST BIGHT H DOCK EXTENSIONS\CAD\V4\H2 H1-H2 DOCK EXTENSIONS-V4.DWG

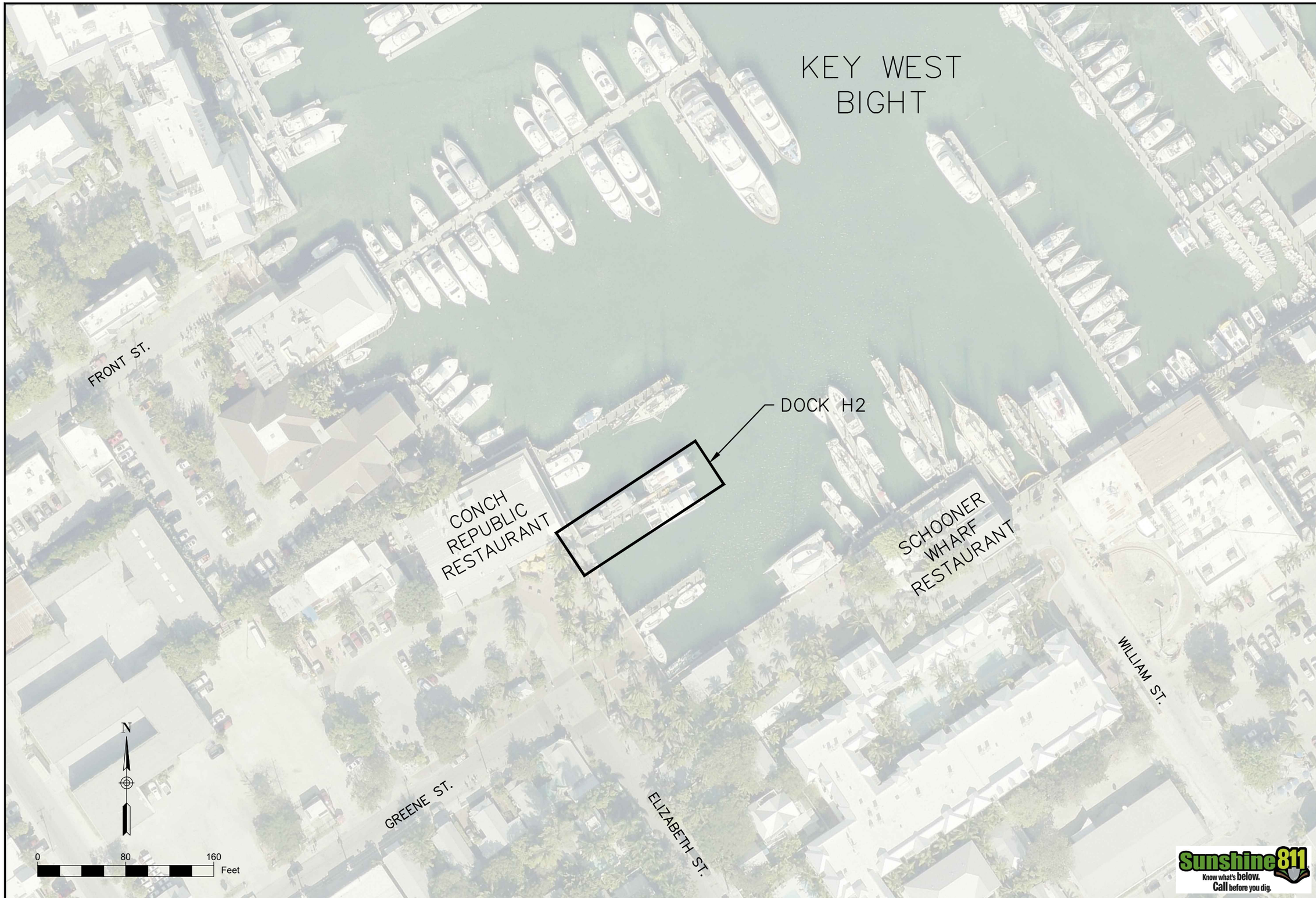

SEAL OF THE CITY OF KEY WEST, FLORIDA

DAVID W. FRODSHAM, STATE OF FLORIDA,
PROFESSIONAL ENGINEER, LICENSE NO. 75507

THIS ITEM HAS BEEN DIGITALLY SIGNED AND SEALED BY DAVID W. FRODSHAM, PE USING A DIGITAL SIGNATURE. ON THE DATE ADJACENT TO THE DIGITAL SIGNATURE.

PRINTED COPIES OF THIS DOCUMENT ARE NOT CONSIDERED SIGNED AND SEALED AND THE ***SHA*** AUTHENTICATION CODE MUST BE VERIFIED ON ANY ELECTRONIC COPIES.

Mark	Description	Date	Appr.
–	–	–	–

Designed by: DF
Drawn By: DP
Checked By: DF
Date: 2/28/2022
Design File: KWB H2 DOCK EXTENSIONS-V4.DWG
Scale: AS SHOWN

TETRA TECH INC.
759 SOUTH FEDERAL HWY
SUITE 314
STUART, FL 34994-2936
TEL: (772) 781-3400
FAX: (772) 781-3411
CERTIFICATE OF AUTHORIZATION NO. 2429

KEY WEST HISTORIC SEAPORT
H-2 DOCK EXTENSIONS

LOCATION PLAN

KEY WEST, MONROE COUNTY, FLORIDA

Sheet Reference:
G-004
Sheet 4 of 8

P:\CITY OF KEY WEST\TASK 47, KEY WEST BIGHT H DOCK EXTENSIONS\CAD\KWB H1-H2 DOCK EXTENSIONS-V4.DWG

NOTE: SURVEY DATA PROVIDED BY AVIROM AND ASSOCIATES, INC. DATED 01/20/2017 AND 11/08/2017.
WATER/FIRE UTILITY DATA OBTAINED FROM WILSON, MILLER, BARTON, AND PEEK, INC. DATED MAY 1995.
ELECTRICAL/COMMUNICATIONS UTILITY DATA APPROXIMATED FROM WILSON, MILLER, BARTON, AND PEEK, INC. DATED OCTOBER 1995.

Sunshine 811 Know what's below. Call before you dig.

SEAL OF THE CITY OF KEY WEST, FLORIDA

DAVID W. FRODSHAM, STATE OF FLORIDA,
PROFESSIONAL ENGINEER, LICENSE NO. 75507

THIS ITEM HAS BEEN DIGITALLY SIGNED AND SEALED BY DAVID W. FRODSHAM, PE USING A DIGITAL SIGNATURE. ON THE DATE ADJACENT TO THE DIGITAL SIGNATURE.

PRINTED COPIES OF THIS DOCUMENT ARE NOT CONSIDERED SIGNED AND SEALED AND THE **SHA** AUTHENTICATION CODE MUST BE VERIFIED ON ANY ELECTRONIC COPIES.

Mark	Description	Date	Appr.
–	–	–	–

Designed by: DF
Drawn By: DP
Checked By: DF
Date: 2/28/2022
Design File: KWHP H2 DOCK EXTENSIONS-V4.DWG
Scale: AS SHOWN

TETRA TECH INC.
759 SOUTH FEDERAL HWY
SUITE 314
STUART, FL 34994-2936
TEL: (772) 781-3400
FAX: (772) 781-3411
CERTIFICATE OF AUTHORIZATION NO. 2429

KEY WEST HISTORIC SEAPORT
H-2 DOCK EXTENSIONS

EXISTING SITE PLAN

KEY WEST, MONROE COUNTY, FLORIDA

Sheet Reference:
C-101
Sheet 5 of 8

P:\CITY OF KEY WEST\TASK 47, KEY WEST BIGHT H DOCK EXTENSIONS\CAD\KWB H1-H2 DOCK EXTENSIONS-V4.DWG

NOTE: SURVEY DATA PROVIDED BY AVIROM AND ASSOCIATES, INC. DATED 01/20/2017 AND 11/08/2017.
WATER/FIRE UTILITY DATA OBTAINED FROM WILSON, MILLER, BARTON, AND PEEK, INC. DATED MAY 1995.
ELECTRICAL/COMMUNICATIONS UTILITY DATA APPROXIMATED FROM WILSON, MILLER, BARTON, AND PEEK, INC. DATED OCTOBER 1995.

Sunshine 811
Know what's below.
Call before you dig.

SEAL OF THE CITY OF KEY WEST, FLORIDA

DAVID W. FRODSHAM, STATE OF FLORIDA,
PROFESSIONAL ENGINEER, LICENSE NO. 75507

THIS ITEM HAS BEEN DIGITALLY SIGNED AND SEALED BY DAVID W. FRODSHAM, PE USING A DIGITAL SIGNATURE. ON THE DATE ADJACENT TO THE DIGITAL SIGNATURE.

PRINTED COPIES OF THIS DOCUMENT ARE NOT CONSIDERED SIGNED AND SEALED AND THE **SHA** AUTHENTICATION CODE MUST BE VERIFIED ON ANY ELECTRONIC COPIES.

Mark.	Description	Date	Appr.
–	–	–	–

Designed by: DF
Drawn By: DP
Checked By: DF
Date: 2/28/2022
Design File: KWHP-H2 DOCK EXTENSIONS-V4.DWG
Scale: AS SHOWN

TETRA TECH INC.
759 SOUTH FEDERAL HWY
SUITE 314
STUART, FL 34994-2936
TEL: (772) 781-3400
FAX: (772) 781-3411
CERTIFICATE OF AUTHORIZATION NO. 2429

KEY WEST HISTORIC SEAPORT
H-2 DOCK EXTENSIONS

PROPOSED SITE PLAN

KEY WEST, MONROE COUNTY, FLORIDA

Sheet Reference:
C-102
Sheet 6 of 8

P:\CITY OF KEY WEST\TASK 47, KEY WEST BOAT H DOCK EXTENSIONS\CAD\KWB H1-H2 DOCK EXTENSIONS-V4.DWG

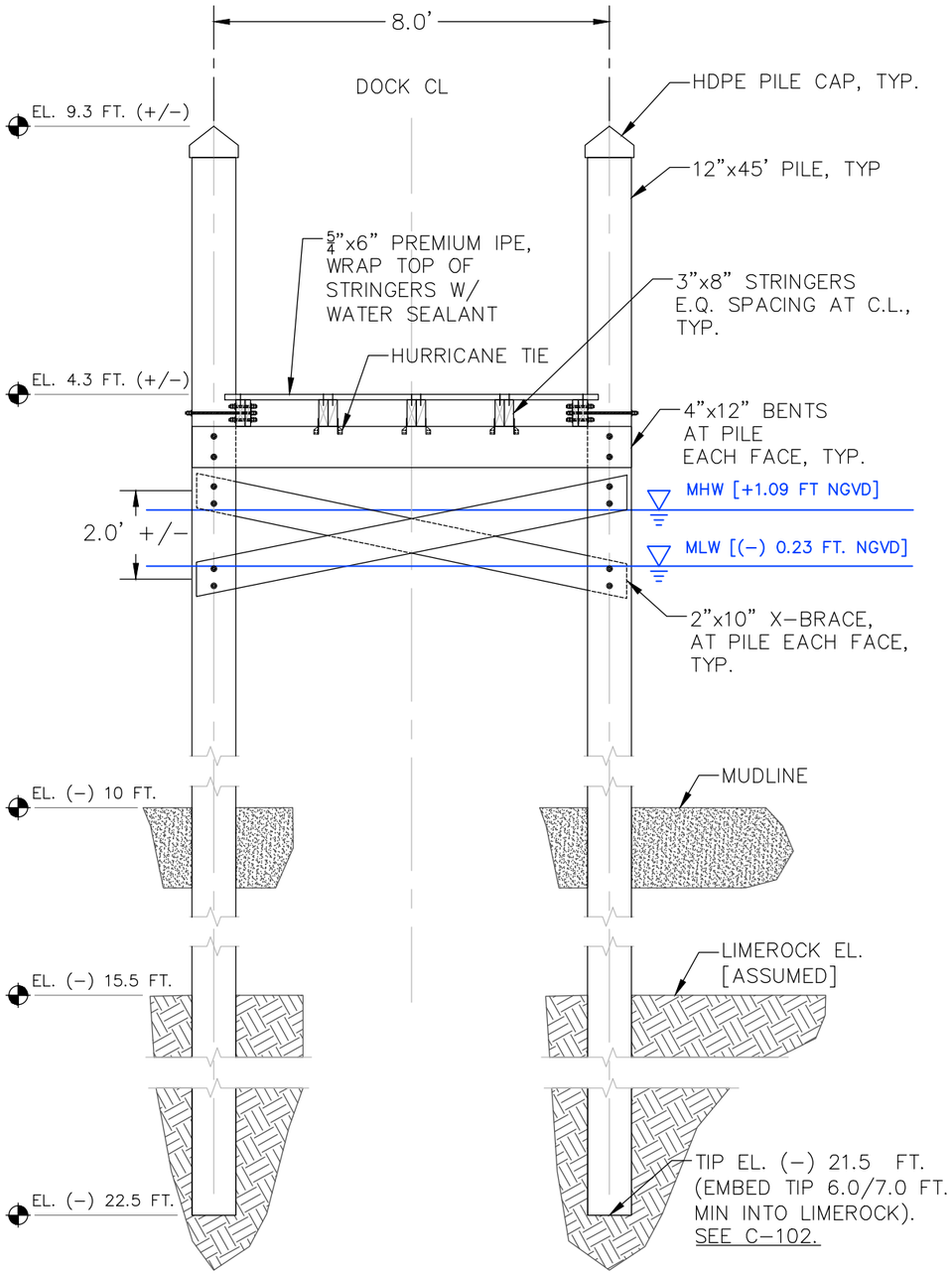

DOCK CROSS-SECTION (B-B)

NOT TO SCALE

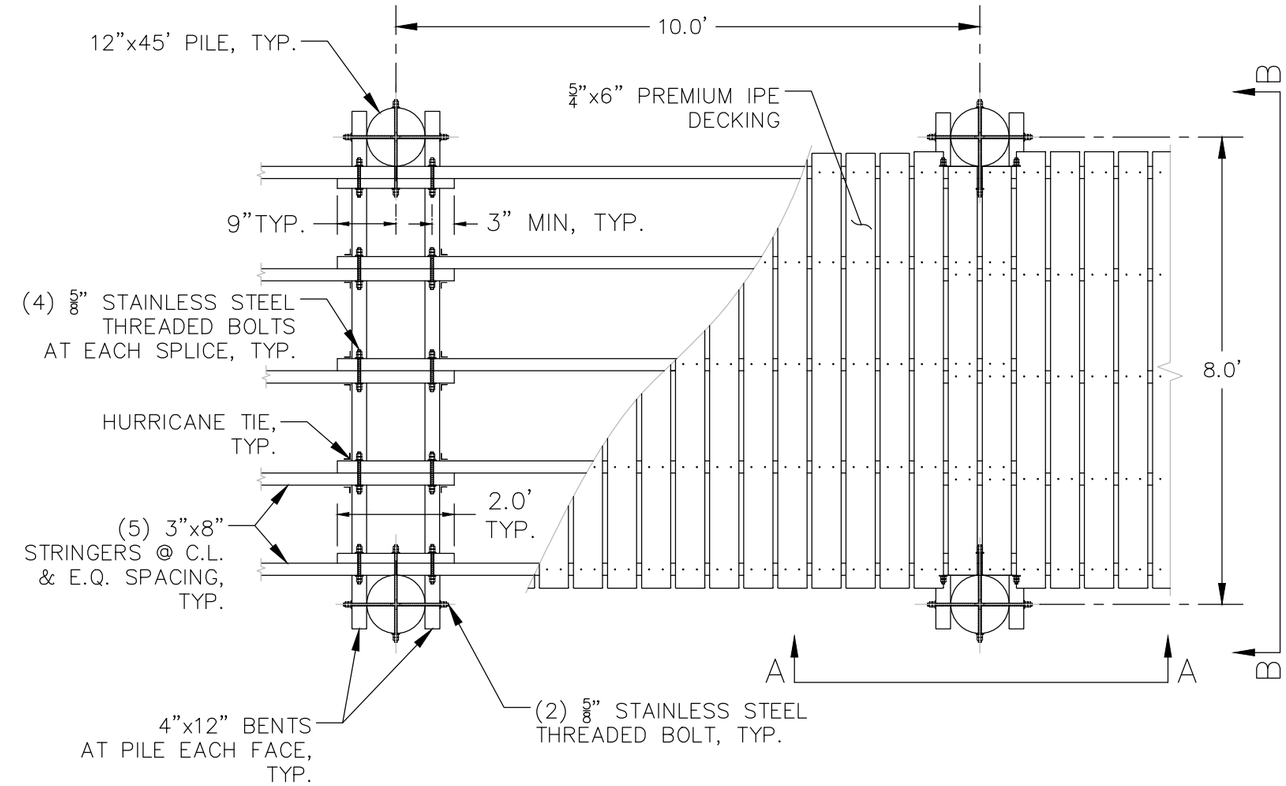

DOCK PLAN VIEW

NOT TO SCALE

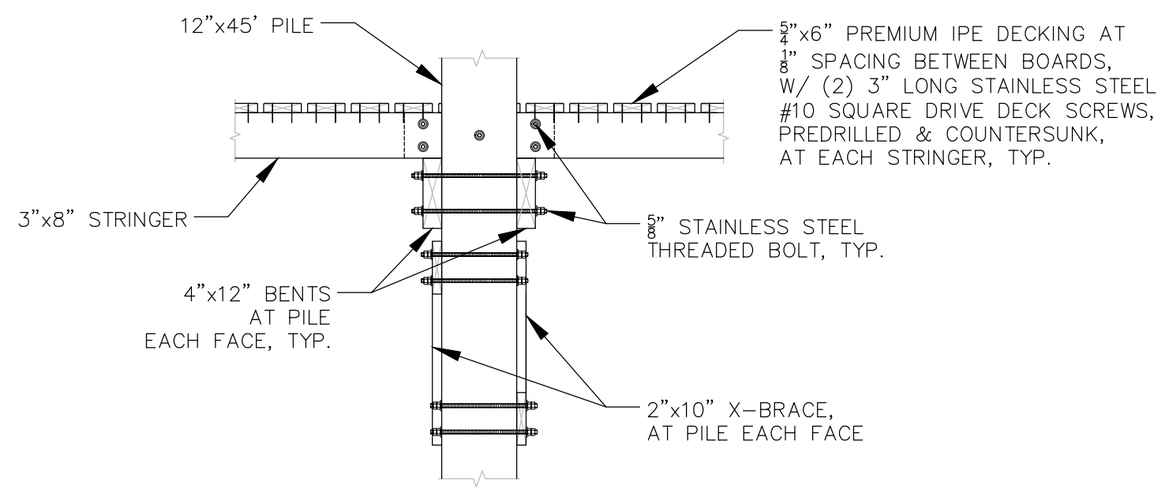

CONNECTION DETAIL (A-A)

NOT TO SCALE

Sunshine811 Know what's below. Call before you dig.

SEAL OF THE CITY OF KEY WEST, FLORIDA

DAVID W. FRODSHAM, STATE OF FLORIDA, PROFESSIONAL ENGINEER, LICENSE NO. 75507

THIS ITEM HAS BEEN DIGITALLY SIGNED AND SEALED BY DAVID W. FRODSHAM, PE USING A DIGITAL SIGNATURE. ON THE DATE ADJACENT TO THE DIGITAL SIGNATURE.

PRINTED COPIES OF THIS DOCUMENT ARE NOT CONSIDERED SIGNED AND SEALED AND THE SHA AUTHENTICATION CODE MUST BE VERIFIED ON ANY ELECTRONIC COPIES.

Mark	Description	Date	Appr.
-	-	-	-

Designed by: DF
Drawn By: DP
Checked By: DF
Date: 2/28/2022
Design file no: KWHH-H2 DOCK EXTENSIONS-V4.DWG
Scale: AS SHOWN

TETRA TECH INC.
759 SOUTH FEDERAL HWY
SUITE 314
STUART, FL 34994-2936
TEL: (772) 781-3400
FAX: (772) 781-3411
CERTIFICATE OF AUTHORIZATION NO. 2429

KEY WEST HISTORIC SEAPORT
H-2 DOCK EXTENSIONS

DOCK CROSS-SECTIONS

KEY WEST, MONROE COUNTY, FLORIDA

Sheet Reference:
C-103
Sheet 7 of 8

P:\CITY OF KEY WEST\TASK 47, KEY WEST BIGHT H DOCK EXTENSIONS\CAD\KWB H1-H2 DOCK EXTENSIONS-V4.DWG

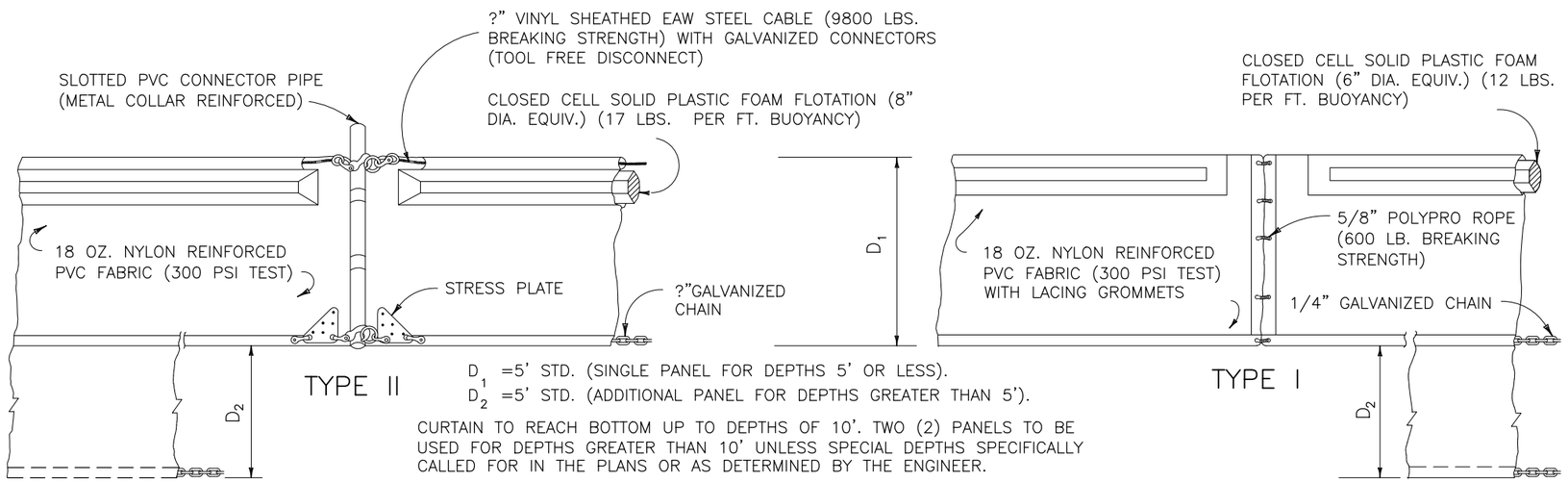

D_1 =5' STD. (SINGLE PANEL FOR DEPTHS 5' OR LESS).
D_2 =5' STD. (ADDITIONAL PANEL FOR DEPTHS GREATER THAN 5').

CURTAIN TO REACH BOTTOM UP TO DEPTHS OF 10'. TWO (2) PANELS TO BE USED FOR DEPTHS GREATER THAN 10' UNLESS SPECIAL DEPTHS SPECIFICALLY CALLED FOR IN THE PLANS OR AS DETERMINED BY THE ENGINEER.

FLOATING TURBIDITY BARRIERS

Sunshine811
Know what's below. Call before you dig.

SEAL OF THE CITY OF KEY WEST, FLORIDA

DAVID W. FRODSHAM, STATE OF FLORIDA, PROFESSIONAL ENGINEER, LICENSE NO. 75507

THIS ITEM HAS BEEN DIGITALLY SIGNED AND SEALED BY DAVID W. FRODSHAM, PE USING A DIGITAL SIGNATURE. ON THE DATE ADJACENT TO THE DIGITAL SIGNATURE.

PRINTED COPIES OF THIS DOCUMENT ARE NOT CONSIDERED SIGNED AND SEALED AND THE SHA AUTHENTICATION CODE MUST BE VERIFIED ON ANY ELECTRONIC COPIES.

Mark	Description	Date	Appr.
–	–	–	–

Designed by: DF
Drawn By: DP
Checked By: DF
Date: 2/28/2022
Design File: KWB H-2 DOCK EXTENSIONS-V4.DWG
Scale: AS SHOWN

TETRA TECH INC.
759 SOUTH FEDERAL HWY
SUITE 314
STUART, FL 34994-2936
TEL: (772) 781-3400
FAX: (772) 781-3411
CERTIFICATE OF AUTHORIZATION NO. 2429

KEY WEST HISTORIC SEAPORT
H-2 DOCK EXTENSIONS

SWPPP DETAILS

KEY WEST, MONROE COUNTY, FLORIDA

Sheet Reference:
C-104
Sheet 8 of 8

P:\CITY OF KEY WEST\TASK 47: KEY WEST BIGHT H DOCK EXTENSIONS\CAD\KWB H1-H2 DOCK EXTENSIONS-V4.DWG

CONSTRUCTION PLANS
231 MARGARET ST
HISTORIC SEAPORT
DECK FRAMING REPAIRS

SITE LOCATION

LOCATION MAP:

CITY OF KEY WEST
PURCHASE ORDER: PO 096121
(DATED 04/20/2022)
ARTIBUS DESIGN TASK ORDER #2203

PROJECT LOCATION:
231 MARGARET ST,
KEY WEST, FL 33040

THIS DRAWING IS NOT VALID WITHOUT THE SIGNATURE AND ORIGINAL SEAL

SERGE MASHTAKOV LICENSE No. 71480 STATE OF FLORIDA PROFESSIONAL ENGINEER

Digitally signed by Serge Mashtakov, PE 71480 State of Florida
Date: 2022.09.05 15:02:58 -04'00'

SIGNATURE:

DATE:

SERGE MASHTAKOV
PROFESSIONAL ENGINEER
STATE OF FLORIDA
LICENSE NO 71480

REV	DESCRIPTION	BY	DATE
STATUS: FINAL			

ARTIBUS DESIGN
ENGINEERING AND PLANNING

ARTIBUS DESIGN
3710 N. ROOSEVELT BLVD
KEY WEST, FL 33040
(305) 304-3512
WWW.ARTIBUSDESIGN.COM
CA # 30835

CLIENT: CITY OF KEY WEST
ENGINEERING DEPARTMENT
1300 WHITE ST.
KEY WEST, FL 33040

PROJECT: HISTORIC SEAPORT
DECK FRAMING REPAIRS

SITE: 231 MARGARET ST,
KEY WEST, FL 33040

TITLE: COVER

SCALE AT 11x17:	DATE:	DRAWN:	CHECKED:
AS SHOWN	09/05/22	AH	SAM
PROJECT NO:	DRAWING NO:		REVISION:
2206-02	G-100		1

General Requirements:

1. Prior to starting any work the Contractor shall review these plans and site conditions and notify the Engineer if any discrepancies are discovered.
2. The Engineer is not responsible for the supervision of the Contractor nor his employees during the construction. It is the Contractor's responsibility to provide means and establish methods of the construction to meet requirements of all applicable codes, industry standards and requirements of these plans.
3. Quality of the work shall meet or exceed industry standard practices.
4. Any deviations from these plans shall be reviewed and approved by the Engineer.

Design Data:

1. Applicable Building Code: FBC Existing Building 7th Edition (2020)
2. Applicable Design Loads: per ASCI/SEI 7-16
   Floor Live Load: 100 psf
   Roof Live Load: 20 psf (300 lb conc.)
   Basic Wind Speed: 180 MPH
   Exposure: D
   Structural Category: II

Flood Zone: VE10

All pressures shown are based on ASD Design,
with a Load Factor of 0.6

3. ASCE 24-14 FLOOD RESISTANT DESIGN AND CONSTRUCTION

Aluminum Components:

1. Type 6061-T6 aluminum.
2. MIG weld all joints w/ continuous 1/8" weld. Use 5356 filler wire alloy.
3. All aluminum in contact with concrete, PT wood, dissimilar metals and other corrosive materials shall coated with coal-tar epoxy or protected by other Engineer approved method.

Hardware:

1. Hardware shall be 316 Stainless Steel or better unless otherwise specified.

Structural Lumber:

1. All wood members shall meet or exceed requirements specified in "ANSI/AF&PA National Design Specification (NDS) for Wood Construction" and all referenced standards.
2. All wood members shall be Pressure Treated Souther Pine No1 or Greater kiln dried as specified in the Standards, unless otherwise specified.
3. All wood members exposed to exterior, in direct contact with concrete or steel shall be Pressure-Treated (PT) UC5C grade (MARINE USE) per AWPA Standards.
4. Nailing shall be in accordance with FBC 7th Edition (2020). Nails and other fasteners for PT wood shall be Stainless Steel or ACQ Approved treated.
5. Sheathing shall be 3/4" CDX Plywood Sheathing Grade, unless otherwise is specified on the plans. Use 10d ring-shank nails with spacing of 4" o.c. on all edges and 6" o.c. in the field.

Structural Steel:

1. Structural steel components shall be as described in "Specifications for Structural Steel Buildings" AISC 360 or later edition.
2. HSS shapes (structural tubing) shall be ASTM A500 (Fy=46 ksi).
3. Steel plates, flanges and miscellaneous elements shall be ASTM A36 (Fy=36 ksi) unless noted otherwise on the plans.
4. W-shapes, C-shapes and other formed steel shall be ASTM A992 (Fy=50 ksi).
5. All welding shall be in conformance with the latest specifications AWS D1.1/D1.1M:2010, Structural Welding Code - Steel.

Structural Steel Coating:

1. All surfaces shall be abrasive blast cleaned to near-white metal (per SSPC-SP10)

Exposed Steel:

2. All surfaces shall be primed with Polyamide Epoxy - one coat (8.0 mils DFT).
3. Apply Sealant at all locations where steel is welded, lapped, etc. Sealant material shall be compatible with the painting system.
4. Top layer shall be two (2) coat Polyurethane (3.0 mils DFT each).
5. Top paint shall be UV resistant or have a UV resistant coating.
6. Colors shall match existing or to be selected by the owner.

Non-Exposed Steel (Interior):

7. 2 coats of "Sumter Coatings" Universal Primer (6.0 mils DFT) or Approved Equal.

SERGE MASHTAKOV
LICENSE
No. 71480
STATE OF FLORIDA
PROFESSIONAL ENGINEER

THIS DRAWING IS NOT VALID WITHOUT THE SIGNATURE AND ORIGINAL SEAL

Digitally signed by Serge Mashtakov, PE 71480 State of Florida
Date: 2022.09.05 15:03:11 -04'00'

SIGNATURE:
DATE:

SERGE MASHTAKOV
PROFESSIONAL ENGINEER
STATE OF FLORIDA
LICENSE NO 71480

REV	DESCRIPTION	BY	DATE
STATUS	FINAL		

ARTIBUS DESIGN
ENGINEERING AND PLANNING

ARTIBUS DESIGN
3710 N. ROOSEVELT BLVD
KEY WEST, FL 33040
(305) 304-3512
WWW.ARTIBUSDESIGN.COM
CA # 30835

CLIENT: CITY OF KEY WEST
ENGINEERING DEPARTMENT
1300 WHITE ST.
KEY WEST, FL 33040

PROJECT: HISTORIC SEAPORT
DECK FRAMING REPAIRS

SITE: 231 MARGARET ST.
KEY WEST, FL 33040

TITLE: NOTES

SCALE AT 11x17:	DATE:	DRAWN:	CHECKED:
AS SHOWN	09/05/22	AH	SAM
PROJECT NO:	DRAWING NO:		REVISION:
2206-02	G-101		1

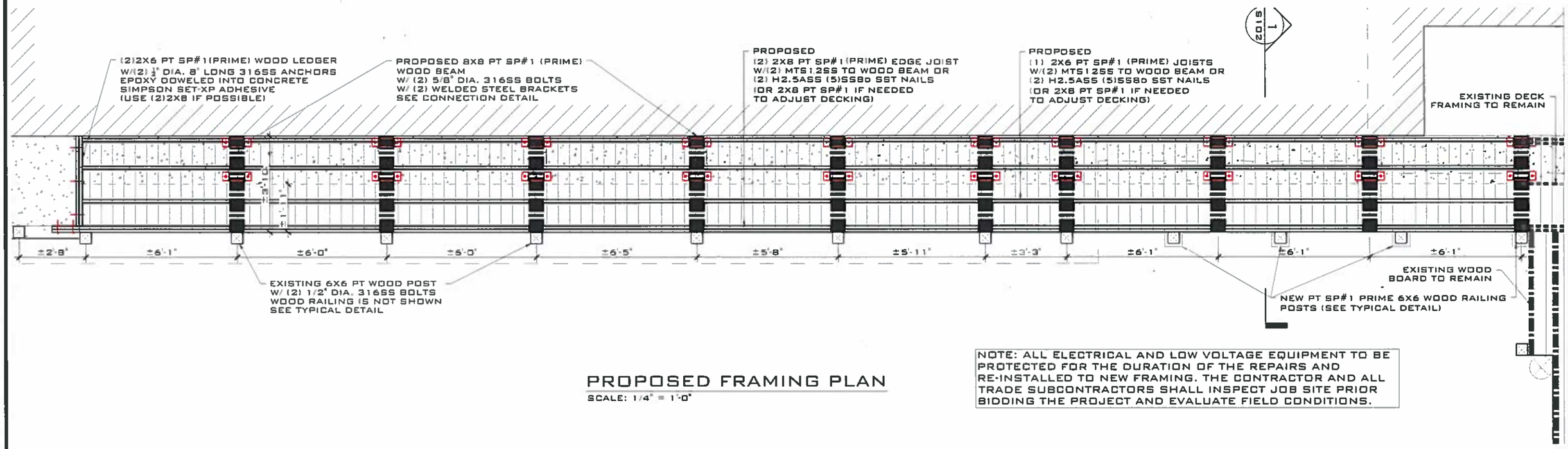

PROPOSED FRAMING PLAN

SCALE: 1/4" = 1'-0"

NOTE: ALL ELECTRICAL AND LOW VOLTAGE EQUIPMENT TO BE PROTECTED FOR THE DURATION OF THE REPAIRS AND RE-INSTALLED TO NEW FRAMING. THE CONTRACTOR AND ALL TRADE SUBCONTRACTORS SHALL INSPECT JOB SITE PRIOR BIDDING THE PROJECT AND EVALUATE FIELD CONDITIONS.

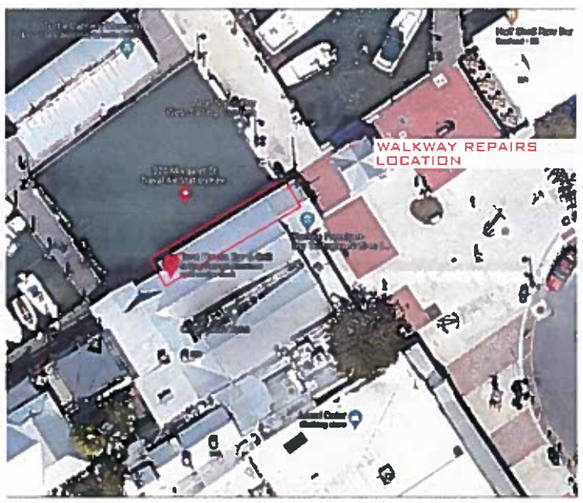

SITE MAP

SCALE: NTS

SERGE MASHTAKOV
LICENSE
No. 71480
STATE OF FLORIDA
PROFESSIONAL ENGINEER

Digitally signed by Serge Mashtakov, PE 71480 State of Florida
Date: 2022.09.05 15:03:24 -04'00'

THIS DRAWING IS NOT VALID WITHOUT THE SIGNATURE AND ORIGINAL SEAL

SIGNATURE:

DATE:

SERGE MASHTAKOV
PROFESSIONAL ENGINEER
STATE OF FLORIDA
LICENSE NO 71480

REV	DESCRIPTION:	BY:	DATE
STATUS	FINAL		

ARTIBUS DESIGN
ENGINEERING AND PLANNING

ARTIBUS DESIGN
3710 N. ROOSEVELT BLVD
KEY WEST, FL 33040
(305) 304-3512
WWW.ARTIBUSDESIGN.COM
CA # 30835

CLIENT: CITY OF KEY WEST
ENGINEERING DEPARTMENT
1300 WHITE ST.
KEY WEST, FL 33040

PROJECT: HISTORIC SEAPORT
DECK FRAMING REPAIRS

SITE: 231 MARGARET ST,
KEY WEST, FL 33040

TITLE: PROPOSED FRAMING PLAN
SITE MAP

SCALE AT 11x17:	DATE:	DRAWN:	CHECKED:
AS SHOWN	09/05/22	AH	SAM

PROJECT NO:	DRAWING NO:	REVISION:
2206-02	S-101	1

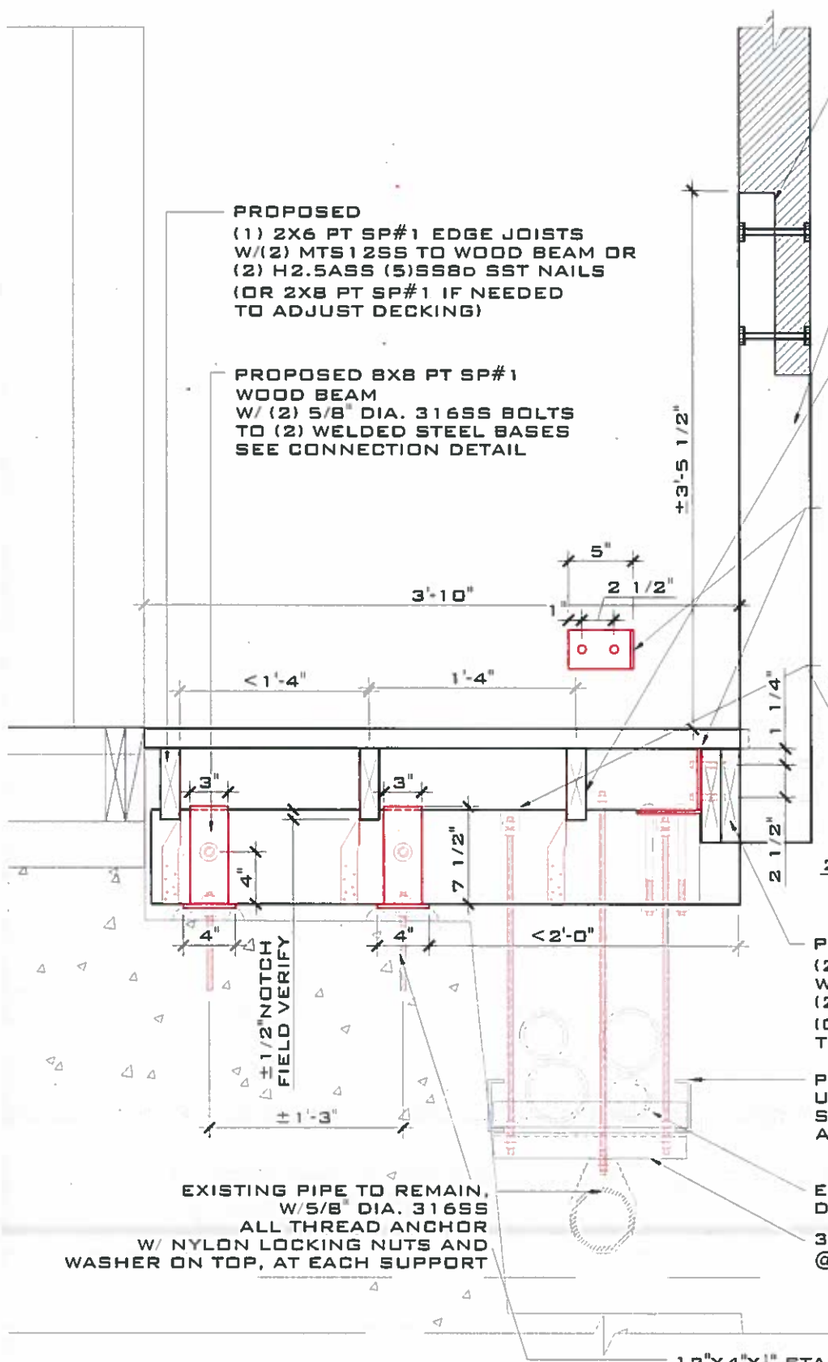

(4) 5/8" DIA. 316SST BOLTS
(RECESSED)
W/ NYLON LOCK NUTS
AND WASHERS
EPOXY COATED AND
CONCEALED

(IF DAMAGED DURING DEMO)
REPLACE W/
6X6 PT WOOD POST
REPLACE BOTTOM OF WOOD POST
W/ (2) 1/2" DIA. 316SS BOLTS
WOOD RAILING IS NOT SHOWN
SEE TYPICAL DETAIL

PROPOSED 2X6 PT SP#1 (PRIME)
JOISTS @16" MAX
W/(2) MTS12SS TO WOOD BEAM OR
(2) H2.5ASS (5)SS8d SST NAILS
(OR 2X8 PT SP#1 IF NEEDED
TO ADJUST DECKING)

CUSTOM MANUFACTURED
3"X5"x5" ¼" ANGLE BRACKET
316SS W/ (2) 1/2" DIA. 316SS
BOLTS AS SHOWN (TO EACH
GUARDRAIL POST)

CUSTOM MANUFACTURED
¼"x2" PLATE BRACKET
316SS W/ ⅝" DIA. 316SS ALL
THREADS TO EACH BEAM
(2) ¼" DIA. 4" 316SS LAG SCREWS
THROUGH TOP

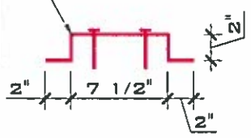

PROPOSED
(2) 2X8 PT SP#1 PRIME EDGE JOIST
W/(2) MTS12SS TO WOOD BEAM OR
(2) H2.5ASS (5)SS8d SST NAILS
(OR 2X8 PT SP#1 IF NEEDED
TO ADJUST DECKING)

PROPOSED FIBERGLASS
UTILITY TRAY
SYSTEM NUMBER 12-7625-0010-12
ACCORDING TO LEGRAND CATALOG

EXISTING CONDUITS TO REMAIN,
DEMO BROKEN AND ABANDONED

316SS UNIRACK SECTION
@ EACH SUPPORT

12"X4"X½" STAINLESS STEEL BASE PLATE,
W/(2) 5/8" DIA. 316SS
ALL THREAD ANCHORS
W/ NYLON LOCKING NUTS ON TOP,
EPOXY DOWEL 8" EMBEDMENT,
SIMPSON SET-XP ADHESIVE
±(1-2) NS GROUT (6000 PSI)
TO ADJUST SURFACE OF BASEMENT

SECTION 1-1

SCALE: 1/4" = 1'-0"

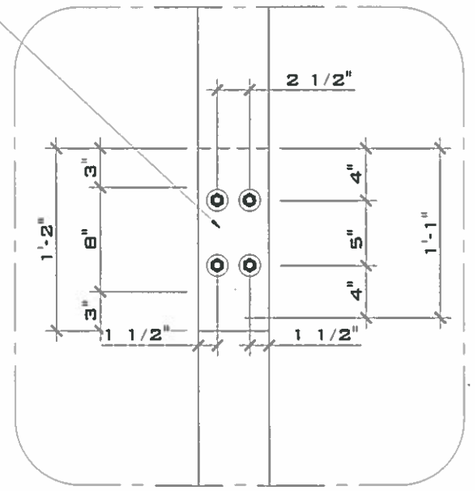

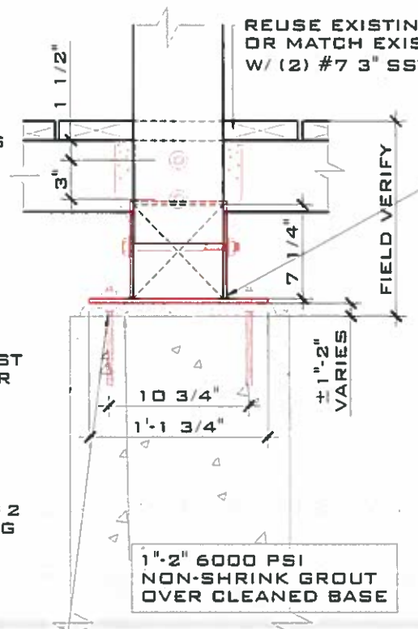

FRONT VIEW

REUSE EXISTING IPE DECKING
OR MATCH EXISTING
W/ (2) #7 3" SST SCREWS EACH SUPPORT

3"x¼" STAINLESS STEEL BRACKET
W/ (1) 5/8" DIA.316SS BOLT
WELDED TO 12"X4" STEEL BASE PLATE
¾" FILLET WELD
W/(2) 5/8" DIA. 316SS
ALL THREAD ANCHORS
W/ NYLON LOCKING NUTS ON TOP,
EPOXY DOWEL 8" EMBEDMENT,
SIMPSON SET-XP ADHESIVE

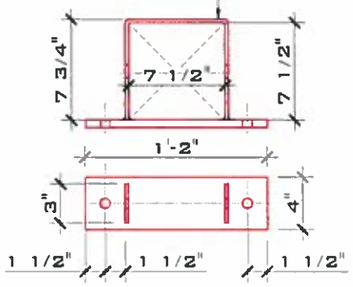

CONNECTION DETAIL

REV:	DESCRIPTION:	BY:	DATE:
STATUS:	FINAL		

ARTIBUS DESIGN
ENGINEERING AND PLANNING

ARTIBUS DESIGN
3710 N. ROOSEVELT BLVD
KEY WEST, FL 33040
(305) 304-3512
WWW.ARTIBUSDESIGN.COM
CA # 30835

THIS DRAWING IS NOT VALID WITHOUT THE SIGNATURE AND ORIGINAL SEAL

SERGE MASHTAKOV
LICENSE
No. 71480
STATE OF FLORIDA
PROFESSIONAL ENGINEER

Digitally signed by Serge Mashtakov, PE 71480 State of Florida
Date: 2022.09.05 15:03:36 -04'00'

DATE:

SERGE MASHTAKOV
PROFESSIONAL ENGINEER
STATE OF FLORIDA
LICENSE NO 71480

CLIENT: CITY OF KEY WEST
ENGINEERING DEPARTMENT
1300 WHITE ST.
KEY WEST, FL 33040

PROJECT: HISTORIC SEAPORT
DECK FRAMING REPAIRS

SITE: 231 MARGARET ST,
KEY WEST, FL 33040

TITLE: SECTION 1-1
DETAILS

SCALE AT 11x17:	DATE:	DRAWN:	CHECKED:
AS SHOWN	09/05/22	AH	SAM
PROJECT NO:	DRAWING NO:		REVISION:
2206-02	S-102		1

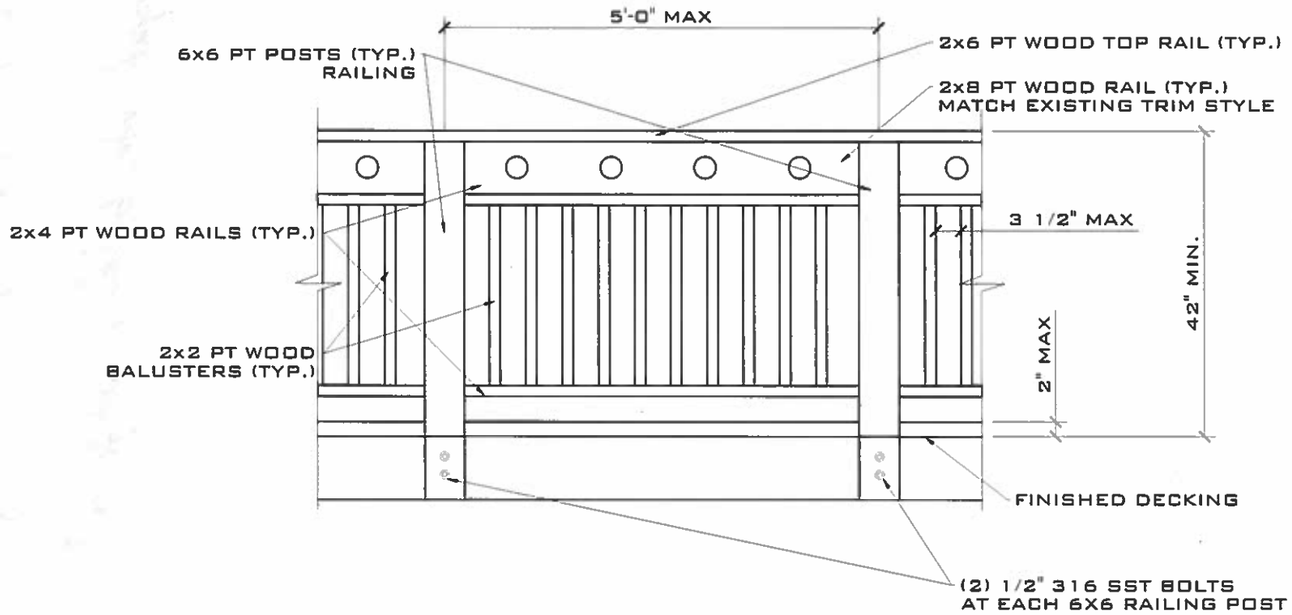

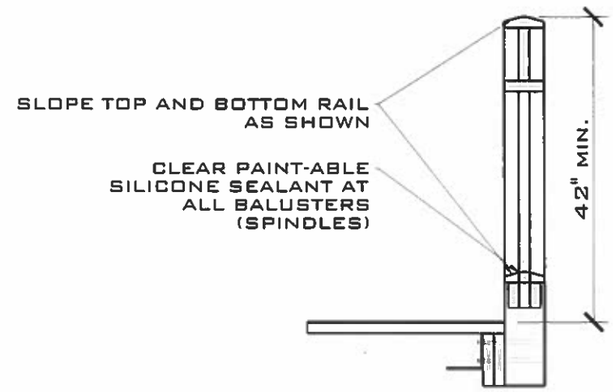

MINIMUM FASTENERS REQUIREMENTS:
1. TOP RAIL TO POSTS - (4) #10x3" SST DECK SCREWS EACH POST;
2. HORIZONTAL RAILS - (4) #10x3" SST DECK SCREWS EACH SIDE;
3. VERTICAL BALUSTERS - (1) #9x2.5" SST DECK SCREWS EACH END;

TYPICAL WOOD RAILING

SCALE: NTS

SECTION

REV	DESCRIPTION:	BY	DATE
STATUS	FINAL		

ARTIBUS DESIGN
ENGINEERING AND PLANNING

ARTIBUS DESIGN
3710 N. ROOSEVELT BLVD
KEY WEST, FL 33040
(305) 304-3512
WWW.ARTIBUSDESIGN.COM
CA # 30835

CLIENT: CITY OF KEY WEST
ENGINEERING DEPARTMENT
1300 WHITE ST,
KEY WEST, FL 33040

PROJECT: HISTORIC SEAPORT
DECK FRAMING REPAIRS

SITE: 231 MARGARET ST,
KEY WEST, FL 33040

TITLE: TYPICAL WOOD RAILING

SCALE AT 11x17:	DATE:	DRAWN:	CHECKED:
AS SHOWN	09/05/22	AH	SAM
PROJECT NO:	DRAWING NO:		REVISION:
2206-02	S-103		1

THIS DRAWING IS NOT VALID WITHOUT THE SIGNATURE AND ORIGINAL SEAL

SERGE MASHTAKOV
LICENSE
No. 71480
STATE OF FLORIDA
PROFESSIONAL ENGINEER

Digitally signed by Serge Mashtakov, PE 71480 State of Florida
Date: 2022.09.05 15:03:47 -04'00'

SIGNATURE:

DATE:

SERGE MASHTAKOV
PROFESSIONAL ENGINEER
STATE OF FLORIDA
LICENSE NO 71480