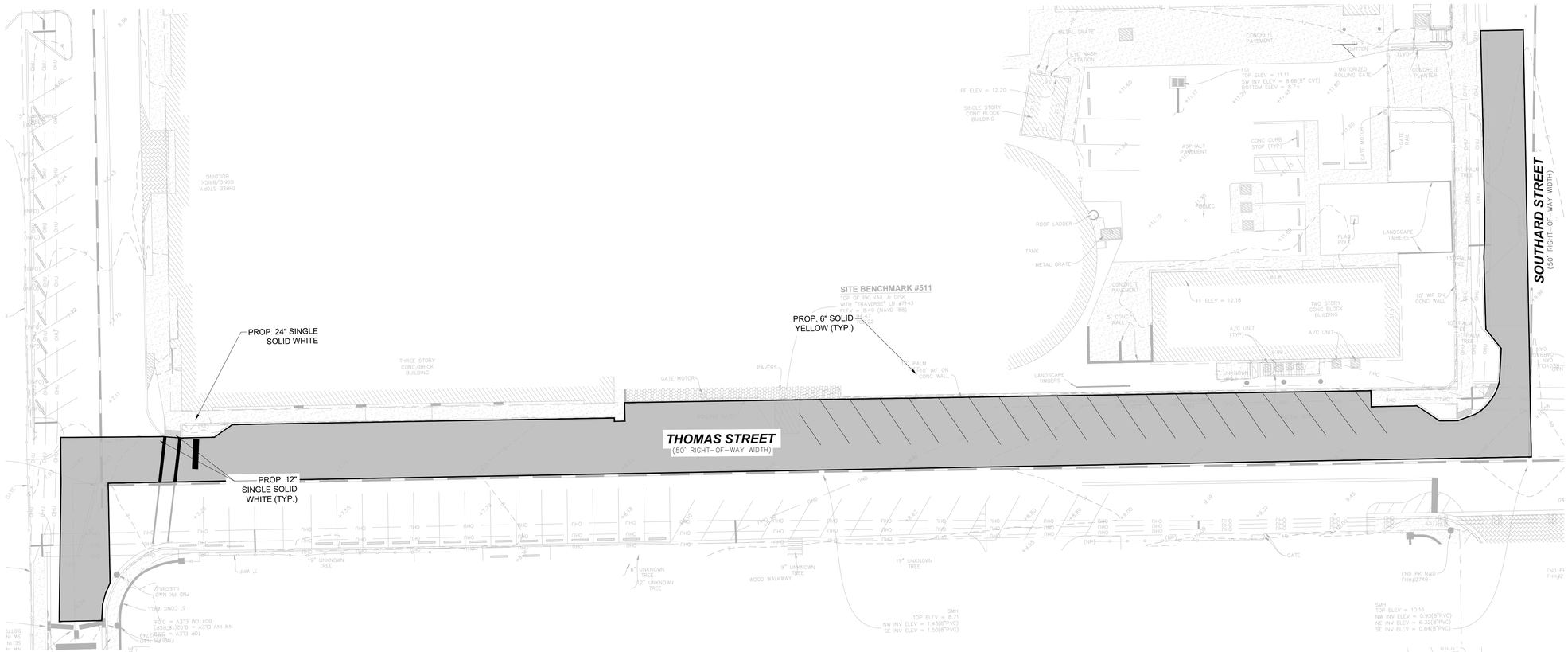

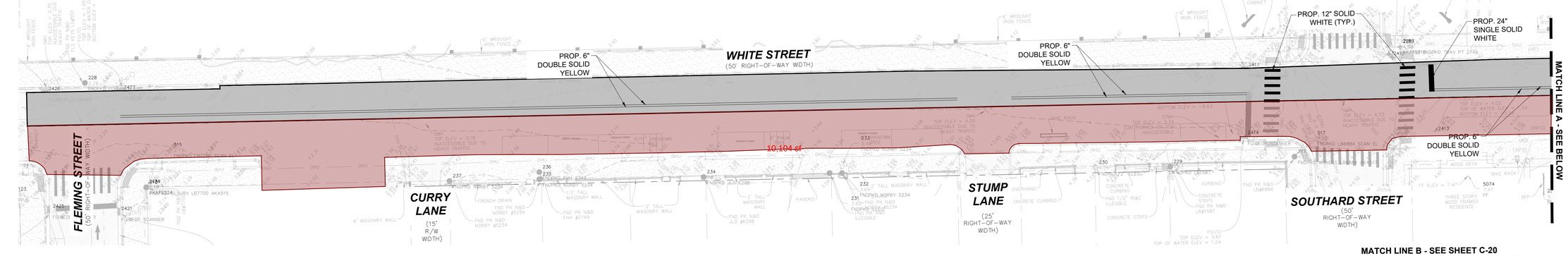

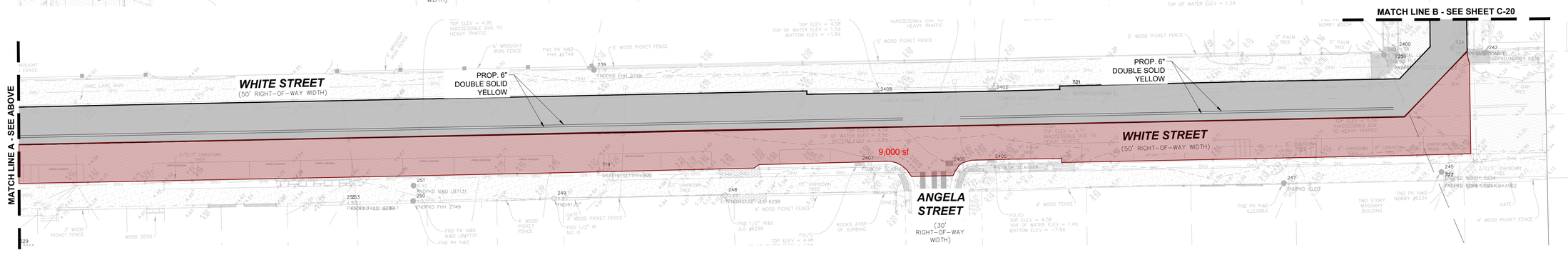

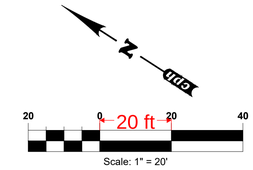

LEGEND

RE-STRIPE PAVEMENT

MILL AND RESURFACE AREA

RESTORATION NOTES:

1. MILL EXISTING ASPHALT PAVEMENT 1.5" AVERAGE DEPTH. TYPE SP STRUCTURAL COURSE (TRAFFIC B) (1.5") AND FRICTION COURSE FC-9.5 (TRAFFIC B) (1") (RUBBER)
2. STRIPING TO CONFORM WITH FDOT INDEX 711-001
3. RPM TO BE PLACED PER FDOT INDEX 706-001
4. CONTRACTOR TO PROTECT ALL EXISTING UTILITIES DURING M&R, INCLUDING; MANHOLES, VALVE COLLARS, CLEANOUTS, WATER METERS, BENCHMARKS, ETC.
5. CONTRACTOR TO RESTORE PAVEMENT TO EXISTING OR BETTER CONDITIONS INCLUDING BUT NOT LIMITED TO: CURB, SIDEWALK, SOD, ETC.

cph
www.cphcorp.com
A Full Service A & E Firm
Architects
Engineers
Environmental
Landscape Architects
M / E / P
Planners
Structural
Surveyors
Traffic / Transportation
Offices in:
• Florida
• Puerto Rico
• Connecticut
• Maryland
KYLE MICHAEL BECHTELHEIMER LICENSE No. 86673 STATE OF FLORIDA PROFESSIONAL ENGINEER
KYLE BECHTELHEIMER, P.E.
FL. P.E. NO. 86673

No.	Date	Revision	By
1			
2			
3			
4			
5			
6			
7			

Designed by:	K.B.
Drawn by:	J.CH.
Checked by:	K.B.
Approved by:	T.H.
Job No.:	F15110
Date:	05/26/23

Plans Prepared By:
CPH, Inc.
1992 SW 1st. St.
Miami, FL 33135
Ph: 305.274.4805
Licenses:
Eng. C.O.A. No. 3215
Survey L.B. No. 7143
Arch. Lic. No. AA2600926
Lndscp. Lic. No. LC0000298

MILLING AND RESURFACING PLAN

FLORIDA KEYS AQUEDUCT AUTHORITY

KEY WEST

MONROE COUNTY, FLORIDA

Sheet No.

C-20

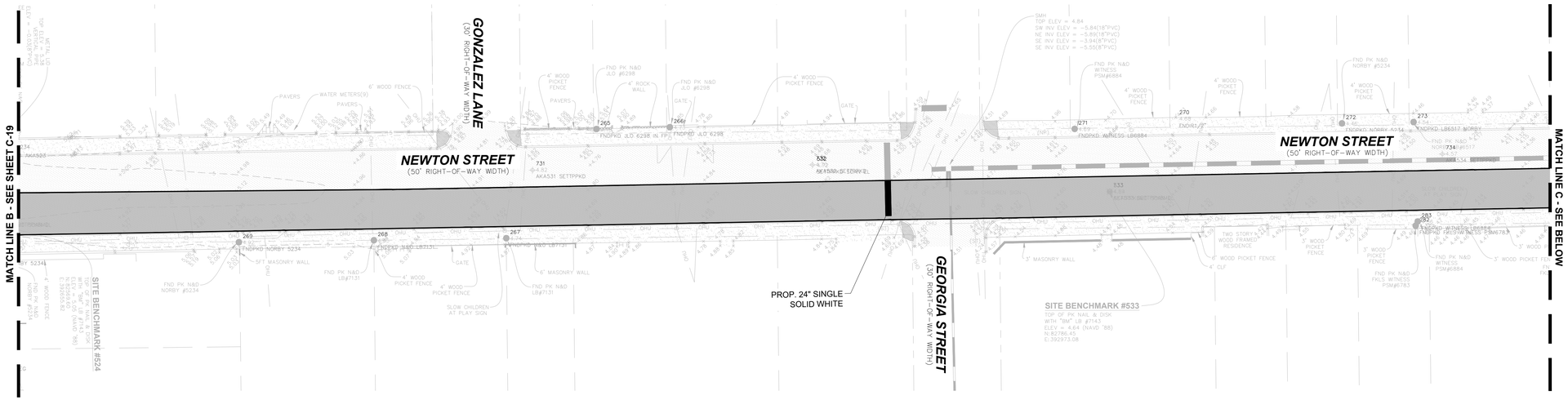

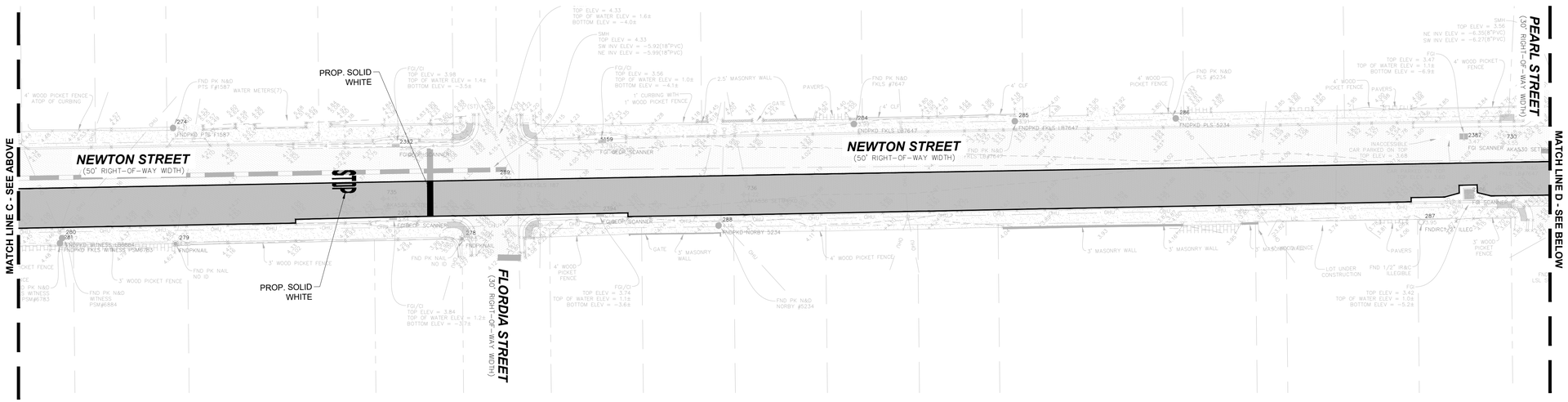

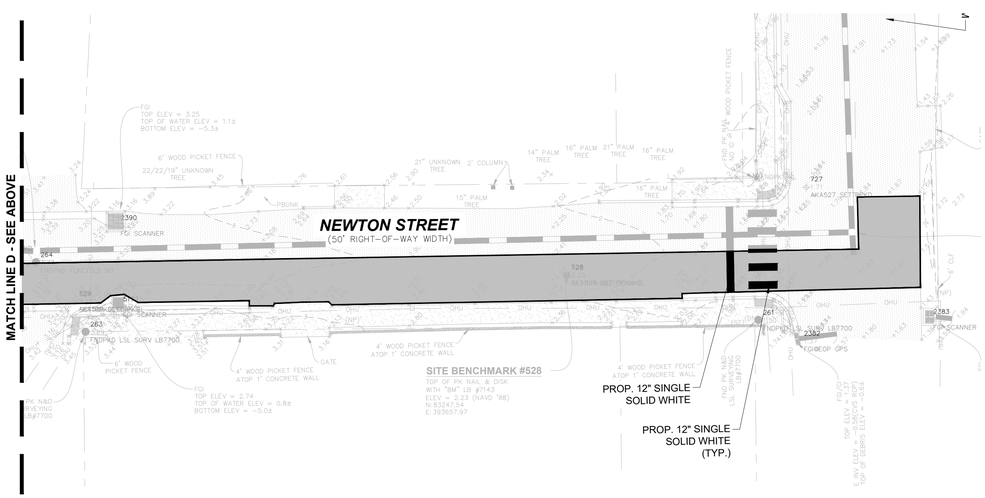

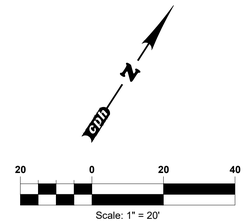

LEGEND

RE-STRIPE PAVEMENT

MILL AND RESURFACE AREA

RESTORATION NOTES:

1. MILL EXISTING ASPHALT PAVEMENT 1.5" AVERAGE DEPTH. TYPE SP STRUCTURAL COURSE (TRAFFIC B) (1.5") AND FRICTION COURSE FC-9.5 (TRAFFIC B) (1") (RUBBER)
2. STRIPING TO CONFORM WITH FDOT INDEX 711-001
3. RPM TO BE PLACED PER FDOT INDEX 706-001
4. CONTRACTOR TO PROTECT ALL EXISTING UTILITIES DURING M&R, INCLUDING; MANHOLES, VALVE COLLARS, CLEANOUTS, WATER METERS, BENCHMARKS, ETC.
5. CONTRACTOR TO RESTORE PAVEMENT TO EXISTING OR BETTER CONDITIONS INCLUDING BUT NOT LIMITED TO: CURB, SIDEWALK, SOD, ETC.

cph
www.cphcorp.com
A Full Service A & E Firm
Architects
Engineers
Environmental
Landscape Architects
M / E / P
Planners
Structural
Surveyors
Traffic / Transportation
Offices in:
• Florida
• Puerto Rico
• Connecticut
• Maryland
KYLE MICHAEL BECHTELHEIMER LICENSE No. 86673 STATE OF FLORIDA PROFESSIONAL ENGINEER
KYLE BECHTELHEIMER, P.E.
FL. P.E. NO. 86673

No.	Date	Revision	By
1			
2			
3			
4			
5			
6			
7			

Designed by:	K.B.
Drawn by:	J.CH.
Checked by:	K.B.
Approved by:	T.H.
Job No.:	F15110
Date:	05/26/23

Plans Prepared By:
CPH, Inc.
1992 SW 1st. St.
Miami, FL 33135
Ph: 305.274.4805
Licenses:
Eng. C.O.A. No. 3215
Survey L.B. No. 7143
Arch. Lic. No. AA2600926
Lndscp. Lic. No. LC0000298

MILLING AND RESURFACING PLAN

FLORIDA KEYS AQUEDUCT AUTHORITY

KEY WEST

MONROE COUNTY, FLORIDA

Sheet No.

C-21

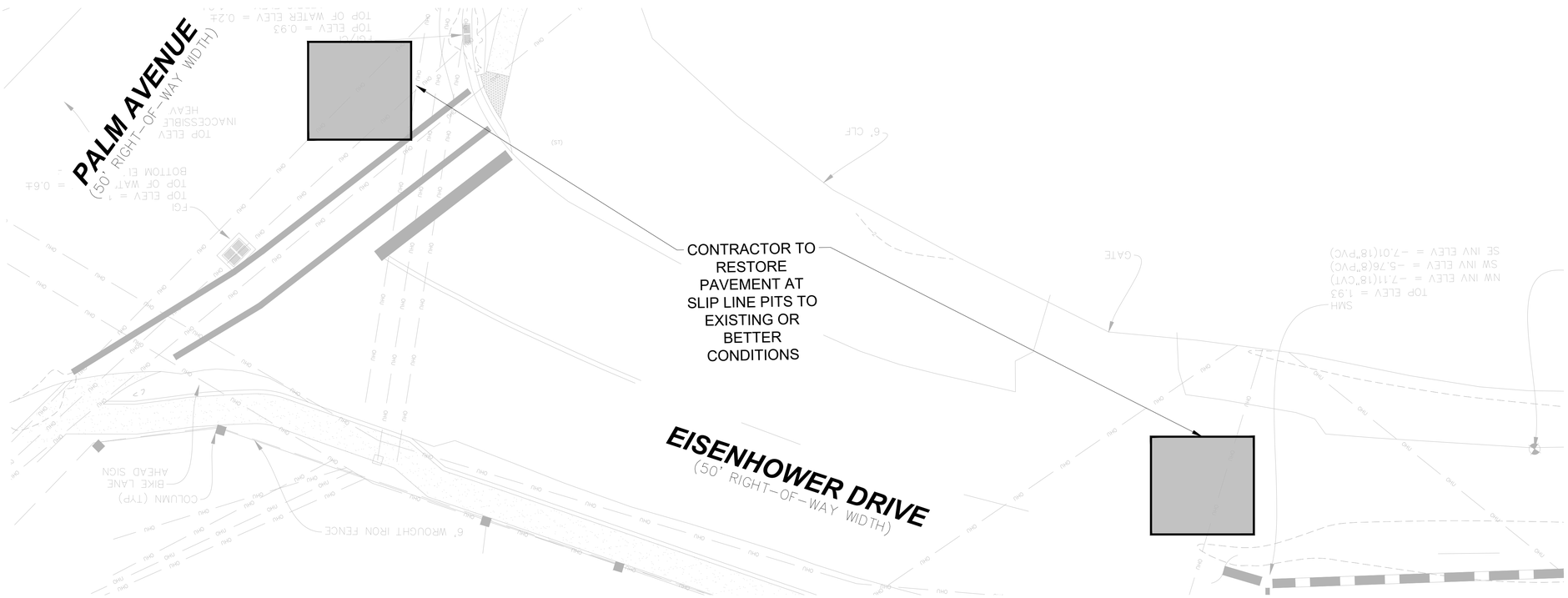

N

Scale: 1" = 10'

LEGEND

MILL AND RESURFACE AREA

RESTORATION NOTES:

1. MILL EXISTING ASPHALT PAVEMENT 1.5" AVERAGE DEPTH. TYPE SP STRUCTURAL COURSE (TRAFFIC B) (1.5") AND FRICTION COURSE FC-9.5 (TRAFFIC B) (1") (RUBBER)
2. STRIPING TO CONFORM WITH FDOT INDEX 711-001
3. RPM TO BE PLACED PER FDOT INDEX 706-001
4. CONTRACTOR TO PROTECT ALL EXISTING UTILITIES DURING M&R, INCLUDING; MANHOLES, VALVE COLLARS, CLEANOUTS, WATER METERS, BENCHMARKS, ETC.
5. CONTRACTOR TO RESTORE PAVEMENT TO EXISTING OR BETTER CONDITIONS INCLUDING BUT NOT LIMITED TO: CURB, SIDEWALK, SOD, ETC.

cph
www.cphcorp.com
A Full Service A & E Firm
Architects
Engineers
Environmental
Landscape Architects
M / E / P
Planners
Structural
Surveyors
Traffic / Transportation
Offices in:
• Florida
• Puerto Rico
• Connecticut
• Maryland
KYLE MICHAEL BECHTELHEIMER LICENSE No. 86673 STATE OF FLORIDA PROFESSIONAL ENGINEER
KYLE BECHTELHEIMER, P.E.
FL. P.E. NO. 86673

No.	Date	Revision	By
7			
6			
5			
4			
3			
2			
1			

Designed by:	K.B.
Drawn by:	J.CH.
Checked by:	K.B.
Approved by:	T.H.
Job No.:	F15110
Date:	05/26/23

Plans Prepared By:
CPH, Inc.
1992 SW 1st. St.
Miami, FL 33135
Ph: 305.274.4805
Licenses:
Eng. C.O.A. No. 3215
Survey L.B. No. 7143
Arch. Lic. No. AA26000926
Lndscp. Lic. No. LC0000298

MILLING AND RESURFACING PLAN

FLORIDA KEYS AQUEDUCT AUTHORITY

KEY WEST

MONROE COUNTY, FLORIDA

Sheet No.

C-22

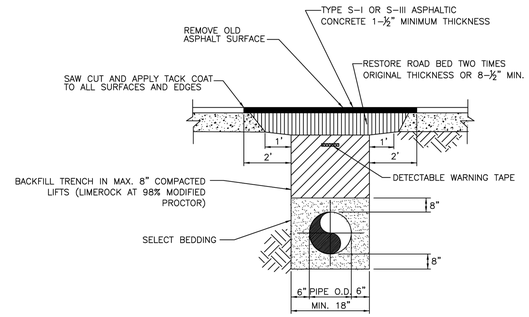

SCALE N.T.S. / DATE 03/96 / REVISED 01/14	FLORIDA KEYS AQUEDUCT AUTHORITY KEY WEST, FLORIDA	PAVEMENT RESTORATION WITH BACKFILL	STANDARD DETAIL DRAWING NO. 1a

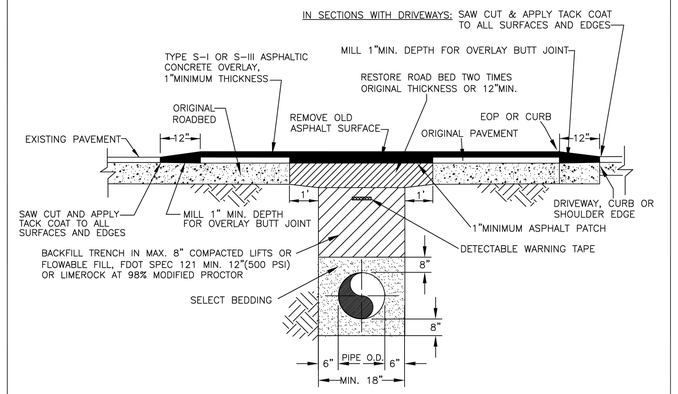

SCALE N.T.S. / DATE 06/01 / REVISED 06/16	FLORIDA KEYS AQUEDUCT AUTHORITY KEY WEST, FLORIDA	FULL LANE RESTORATION WITH BACKFILL AND ASPHALT OVERLAY	STANDARD DETAIL DRAWING NO. 3a

PVC PIPE RESTRAINT JOINT SCHEDULE

LENGTH (L) TO BE RESTRAINED

NOMINAL PIPE SIZE (IN.)	HORIZONTAL BENDS 90° BENDS L(FT.)	45° BENDS L(FT.)	22.5° BENDS L(FT.)	11.25° BENDS L(R(FT.)	VERTICAL OFFSETS 45° BENDS (SEE NOTE 4) LU(FT.)	LI(FT.)	VALVES (1)& DEAD-ENDS L(FT.)
4	20	8	4	2	20	3	50
6	28	10	5	2	28	4	70
8	36	14	6	3	36	5	90
10	40	18	8	4	45	6	110
12	50	20	9	4	52	8	120
14	56	23	10	5	60	9	140
16	60	26	11	6	67	10	160
18	69	29	12	6	74	12	180
20	75	32	13	7	80	13	195
24	76	33	15	7	81	14	200
30	88	36	18	9	97	16	235
36	100	40	20	10	110	20	270
42	115	48	23	11	125	24	300
48	125	52	25	12	140	30	340

REDUCERS (SIZE)	L FT.
6 X 4	35
8 X 6	35
8 X 4	65
10 X 8	35
10 X 6	65
12 X 10	35
12 X 8	65
16 X 12	65
16 X 10	95
20 X 18	35
20 X 16	65
20 X 12	120
24 X 20	65
24 X 18	95
24 X 16	120
30 X 24	80
30 X 20	150
36 X 30	80
36 X 24	150
42 X 36	80
42 X 30	150
42 X 42	80
48 X 36	150

TEES (NOTE 5) RUN SIZE	BRANCH SIZE	L FT.
6"	4"	F.O.
	4"<LESS	10 F.O.
8"	6"	30 F.O.
	6"<LESS	10 F.O.
10"	8"	48
	6"<LESS	14 F.O.
12"	10"	65
	8"<LESS	35 F.O.
16"	12"	100
	10"<LESS	40 F.O.
20"	16"	130
	12"<LESS	80 F.O.
24"	20"	130
	16"	90
	12"<LESS	40 F.O.
30"	24"	140
	20"	80
	16"<LESS	50 F.O.
36"	30"	180
	30"	120
	24"	50
	20"<LESS	F.O.
42"	42"	220
	36"	160
	30"	80
	24"	40
	20"<LESS	F.O.
48"	48"	250
	42"	180
	36"	90
	30"	40
	24"<LESS	F.O.

F.O. = FITTING ONLY

PVC PIPE RESTRAINT NOTES

1. THIS SCHEDULE SHALL BE UTILIZED ON ALL WATER, SEWER FORCE MAIN OR RECLAIMED WATER SYSTEMS. ALL FITTINGS SHALL BE RESTRAINED TO LENGTHS INDICATED ON THE ABOVE SCHEDULE, AT A MINIMUM.

2. ASSUMPTIONS: PVC PIPE, SAFETY FACTOR = 1.5, TEST PRESSURE = 150 PSI, SOIL = GM OR SM, TRENCH TYPE 3, DEPTH OF COVER = 36".

3. BENDS AND VALVES: SHALL BE RESTRAINED ON EACH SIDE OF FITTING.

4. VERTICAL OFFSETS: ARE APPROX. 3 FEET COVER ON TOP AND APPROX. 8 FEET COVER ON BOTTOM. PER THE DETAILS, LU IS THE RESTRAINED LENGTH FOR THE UPPER (TOP) LEVEL. LI IS THE RESTRAINED LENGTH FOR THE LOWER (DEEPER) LEVEL. ASSUME 45 DEGREE BENDS.

5. TEES: TOTAL LENGTH BETWEEN FIRST JOINTS OR RESTRAINED LENGTH ON EITHER SIDE OF TEE (RUN) SHALL BE A TOTAL DISTANCE OF 30 FEET (MIN) SEE SCHEDULE ABOVE FOR RESTRAINT LENGTH ON TEE "BRANCH" LINE.

6. HDPE TO PVC TRANSITIONS: THE PVC PIPE SIDE SHALL BE RESTRAINED 35 FEET (MIN.).

SCALE N.T.S. / DATE 03/96 / REVISED 01/14	PVC PIPE RESTRAINT JOINT SCHEDULE	STANDARD DETAIL DRAWING NO. 4 (1 OF 2)

FLORIDA KEYS AQUEDUCT AUTHORITY
KEY WEST, FLORIDA

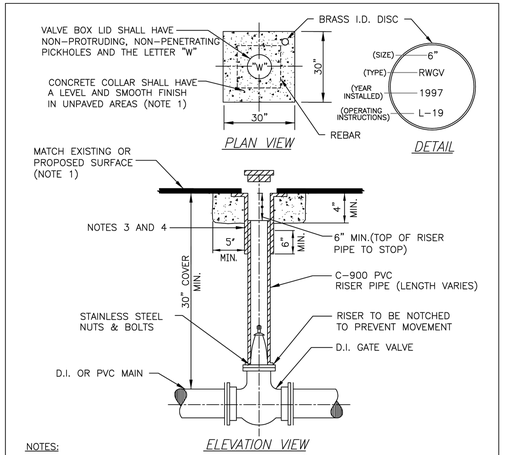

NOTES:

1. CONCRETE COLLAR ALSO MAY BE FORMED AS A 30" DIA. CIRCLE UNDER PAVEMENT.
2. IN UNPAVED AREA INSTALL VALVE BOX LID 1/2" ABOVE SURFACE. #5 REBAR SHALL BE REQUIRED.
3. U.S.F. No. 7615 OR APPROVED EQUAL WITH 6" DIA. RISER FOR VALVES 6" DIA. OR SMALLER.
4. U.S.F. No. 7630 OR APPROVED EQUAL WITH 10" DIA. RISER FOR VALVES 8" DIA. OR LARGER.
5. RESTRAIN AS REQUIRED PER DETAIL NO. 4.

SCALE N.T.S. / DATE 03/96 / REVISED 01/14	GATE VALVE AND BOX	STANDARD DETAIL DRAWING NO. 5

FLORIDA KEYS AQUEDUCT AUTHORITY
KEY WEST, FLORIDA

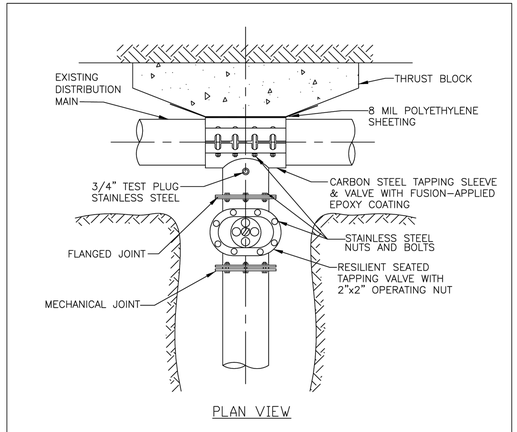

NOTES:

1. PRESSURE TEST INSTALLED TAPPING SLEEVE AND VALVE ASSEMBLY BEFORE TAPPING EXISTING MAIN. SEE FKAA MINIMUM CONSTRUCTION STANDARDS & SPECIFICATIONS.
2. SEE FKAA MINIMUM CONSTRUCTION STANDARDS & SPECIFICATIONS FOR LIST OF APPROVED TAPPING SLEEVES AND VALVES.
3. ALL TAPS SHALL BE MADE WITH AN APPROVED TAPPING DEVICE.

SCALE N.T.S. / DATE 03/96 / REVISED 01/14	TAPPING SLEEVE AND VALVE FOR DISTRIBUTION MAIN	STANDARD DETAIL DRAWING NO. 7

FLORIDA KEYS AQUEDUCT AUTHORITY
KEY WEST, FLORIDA

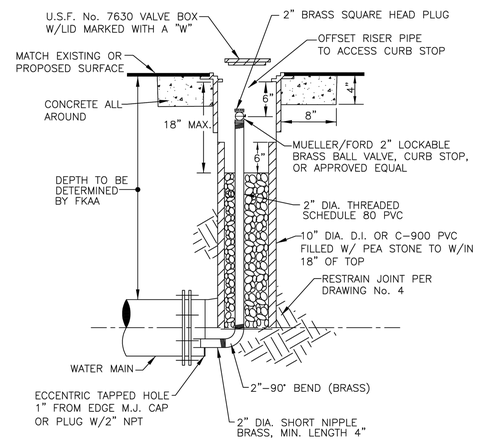

NOTES:

1. TO BE USED AT LINE END WHERE FLUSH-OUT ASSEMBLY IS SPECIFIED.
2. IN UNPAVED AREA INSTALL VALVE BOX LID 1/2" ABOVE SURFACE. #5 REBAR SHALL BE REQUIRED.
3. ALL PIPE TO BE SCHEDULE 80 PVC.
4. ALL FITTINGS TO BE BRASS.

SCALE N.T.S. / DATE 06/03 / REVISED 01/14	FLUSH-OUT ASSEMBLY	STANDARD DETAIL DRAWING NO. 8

FLORIDA KEYS AQUEDUCT AUTHORITY
KEY WEST, FLORIDA

cph
www.cphcorp.com
A Full Service A & E Firm
Architects
Engineers
Environmental
Landscape Architects
M / E / P
Planners
Structural
Surveyors
Traffic / Transportation
Offices in:
• Florida
• Puerto Rico
• Connecticut
• Maryland
KYLE MICHAEL BECHTELHEIMER LICENSE No. 86673 STATE OF FLORIDA PROFESSIONAL ENGINEER
KYLE BECHTELHEIMER, P.E.
FL. P.E. NO. 86673

No.	Date	Revision	By
1			
2			
3			
4			
5			
6			
7			

Designed by:	K.B.
Drawn by:	J.CH.
Checked by:	K.B.
Approved by:	T.H.
Job No.:	F15110
Date:	05/26/23

Plans Prepared By:
CPH, Inc.
1992 SW 1st. St.
Miami, FL 33135
Ph: 305.274.4805
Licenses:
Eng. C.O.A. No. 3215
Survey L.B. No. 7143
Arch. Lic. No. AA2600926
Lndscp. Lic. No. LC0000298

CIVIL DETAILS

FLORIDA KEYS AQUEDUCT AUTHORITY
KEY WEST
MONROE COUNTY, FLORIDA

Sheet No.
C-23